Pan African University
Institute of Water and Energy Sciences

PAN-AFRICAN UNIVERSITY
INSTITUTE FOR WATER AND ENERGY SCIENCES
(Including CLIMATE CHANGE)

Master Dissertation

Submitted in partial fulfillment of the requirements for the Master degree in

ENERGY ENGINEERING

Presented by

Brian WAMUKOYA

AN ANALYSIS ON THE IMPACT OF LARGE WIND FARMS ON THE SIZING AND ALLOCATION OF POWER SYSTEMS SPINNING RESERVE

Defended on 03/08/2018 Before the Following Committee:

Chair	Dr. Robert Kipilmo Chair	JKUAT
Supervisor	Prof. Christopher Maina	Murang'a University of Technology
External Examiner	Prof. Cheriff Lahoucine	University of Guelma
Internal Examiner	Prof. Zaki Sari	University of Tlemcen

DECLARATION

I Wamukoya K. Brian, hereby declare that this thesis represents my personal work, realized to the best of my knowledge. I also declare that all information, material and results from other works presented here, have been fully cited and referenced in accordance with the academic rules and ethics.

WAMUKOYA K. BRIAN

Signature……. Date…….

SUPERVISOR CONFIRMATION

This thesis is hereby submitted to the Department of Energy Engineering, Pan African University Institute of Water and Energy Sciences, with my approval as the supervisor:

PROF. CHRISTOPHER MAINA MURIITHI

Ag. Dean School of Engineering and Technology,
Murang'a University of Technology.

Signature……..... Date……..

DEDICATION

I dedicate this study to my family. I am truly grateful for their love, care and moral support they have portrayed during my schooling time, which has contributed much to my success. God bless you all.

ACKNOWLEDGEMENT

First and foremost I would like to thank God Almighty for the free gift of life, unconditional love, protection, provision and guidance (2 Corinthians 9:15), and for giving me the opportunity to commence and successfully complete this study.

To my mum, dad, and siblings, I greatly appreciate the love, care, support and wisdom you always communicate to me in various ways that only maturity could interpret. Thank you all for guiding me through this quest of life since learning is a process that has only means but no end.

To Prof. Maina, my supervisor, for all the guidance, dedication and support you have provided me with throughout this study despite having a tight schedule. Sir, your priceless technical and editorial input, suggestions, discussions and advice have played an integral role in the commencement and successful completion of this thesis. To you, I am whole-heartedly grateful Sir.

To Mr. Bonface O. Ngoko, thank you for the career defining knowledge and nuggets of wisdom that you have imparted in me over the years especially in the power systems field of study. Because of you, I had the courage to embark on and complete this research and can now face the world with my head held up high.

Not forgetting my colleagues, Wekesa, Majwa, Kioko, and Kiogora, gentlemen and lady, your honest opinions and words of encouragement over the couple of years have greatly continued to contribute positively to my attitude towards learning and now the implementation of this research work.

Lastly my sincere gratitude to PAUWES, African Union Commission and its partners for their invaluable support in financing and facilitating this research work.

ABSTRACT

The need to diversify power generation sources, increase security of supply, incorporate sustainability in energy sources and reducing fuel usage and emissions has significantly led to the integration of variable renewable energy sources such as wind to power grids globally. Kenya, for instance, targets to increase wind power generation to 2,000 MW by 2031. However, increased integration of wind power into a grid necessitates the need to update unit commitment and operating reserve algorithms since wind power is highly variable, intermittent and non-dispatchable. In addition, operational decisions in these grids are made on the basis of wind and load forecasts which are not perfect. Therefore, variability and uncertainty due to wind power introduced in the system is expected to have adverse effect on power system operation. It is important then to predict the effects of increased Variable renewable energy generation on various technical aspects of the power system.

One such concern is what increased intermittent renewable energies would mean on the reliability of the power system given their fluctuating nature. Such generators are not only prone to equipment failure but also to absence of the "fuel" e.g. the wind resource during certain periods. The rule of thumb when operating a number of generators in a power system is to ensure that the spinning reserve is greater than the largest online generator (the N-1 criterion). However, extra reliability considerations have to be factored in due to the intermittency of the wind resource when it forms a significant proportion of the system generation mix.

In this research, the effects of increased wind power generation on the power system spinning reserve resource requirements were analyzed. The first step was to model the variability of typical wind and load data in MATLAB/Simulink software, the results of which were plotted in time series to assess the variability of the two. Next, variable wind speed data were converted into wind power data using an appropriate model also designed in the MATLAB/Simulink software. Monte Carlo Simulations were performed by use of the Unit Commitment formulation method and a probabilistic approach so as to analyze the amount of spinning reserve resource required and the optimal cost of operation for a model having three different levels of wind power generation: 20MW, 40MW and 60MW of wind power.

Finally, the spinning reserve resource requirements were quantified for the three different levels of wind power generation, both with and without the reserve constraint being considered. The

study demonstrates that operating reserve is quantified considering the largest online generator, system generation margins and a fraction of the wind power integrated to the system. The study findings reveal that increased wind power integration should be met by an increase in spinning reserve resource allocation to cater for inherent variability, intermittency and uncertainty that characterize wind power. The study recommends that the cost of provision of additional operating reserve due to wind integration should be compared to the benefit of introduction of wind to the grid.

Table of Contents

LIST OF ABBREVIATIONS

ARMA	Auto-Regressive Moving Average
CDF	Cumulative Distribution Function
DFIG	Doubly-Fed Induction Generator
ED	Economic Dispatch
GW	Giga-Watts
GWEC	Global Wind Energy Council
IPP	Independent Power Plant
KenGen	Kenya Electricity Generating Company Limited
KIPRA	Kenya Institute of Public Policy Research & Analysis
kV	Kilo-Volts
kW	Kilo-Watts
LOLE	Loss of Load Expectation
LOLF	Loss of Load Frequency
LOLP	Loss of Load Probability
MCS	Monte Carlo Simulation
MW	Mega-Watts
PDF	Probability Density Function
PV	Photo-Voltaic
SCIG	Squirrel Cage Induction Generator
VRE	Variable Renewable Energy
WPP	Wind Power Plant
WP	Wind Power
WRIG	Wound Rotor Induction Generator
WTG	Wind Turbine Generator
UC	Unit Commitment

LIST OF FIGURES AND TABLES

CHAPTER ONE

1.0 INTRODUCTION

1.1 Background

The Kenyan Government has identified the availability of adequate, reliable and affordable electricity as a key factor towards driving further economic development. Accordingly, the Government aims to achieve a sixfold increase in the national electricity capacity between 2014 and 2024, from approximately 2,000 megawatts to over 12,000 megawatts. Most of the proposed expansion is based on coal, gas and geothermal generation [1]. Variable renewable energy (VRE) in the form of wind and solar only plays a minor role in the national development plans, despite the considerable natural potential.

The resource-conserving expansion of wind and solar energy could substitute the planned climate-damaging use of coal, diesel and gas, and therefore make a crucial contribution to reducing greenhouse gas emissions. An increased share of VRE would lower power generation costs, thus simultaneously increasing the country's competitiveness.

Currently, Kenya has an installed capacity of about 2,400MW, against a peak demand of 1,600MW [1]. Of the installed capacity, thermal generators ordinarily account for about 11 per cent of the power consumed in the country. However, during dry spells, which ostensibly occurs almost perennially, electricity production from the thermal generators is usually scaled up as production from hydro sources declines. In this regard, more capacity from the cheaper and renewable electricity sources could have taken the costly and unsustainable thermal power producers out of the country's generation mix. Figure 1.1 below shows the proportion of installed electricity capacity according to technology of generation in Kenya.

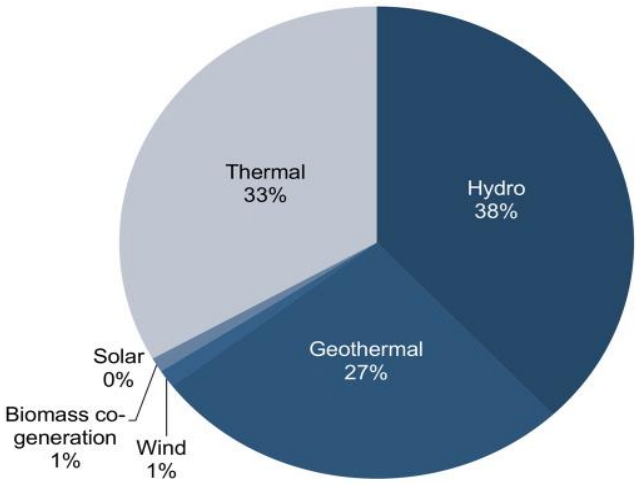

Figure 1.1: Installed Electricity generation Capacity- 2015

Source: Kenya Power Statistics [1]

The elevated cost of energy is one of the biggest bottlenecks for the attainment of Kenya Vision 2030. The Kenya Vision 2030 is a long-term development strategy, whose aim is to transform Kenya into a globally competitive and prosperous economy with a high quality of life. It envisages that Kenya will be transformed into a newly industrialized, middle-income country providing high-quality life to all Kenyans in a clean and secure environment [2].

In order to reach an average annual economic growth rate of 10 per cent for the next 16 years as outlined in Kenya Vision 2030, the country needs to adopt robust, well thought-out solution for the drought power crisis [3]. With a view of addressing the drought-induced crisis, the government has undertaken significant steps in the promotion, development and utilization of variable renewable-energy resources. A functional Feed-in-Tariff structure for renewable energy is already in place. The aim is to increase the proportion of renewable contributing in meeting the country's energy demand, diversify generation sources and improve energy security.

At the continental level, Africa has vast renewable energy sources. It boasts of incredibly huge potential in VRE sources such as wind and solar, receiving, for example the highest amounts of solar radiation than any other continent on the planet. Under African union's Agenda 2063 which aims to achieve a peaceful, prosperous and integrated Africa takes cognizance of the importance of clean, reliable, affordable, benign and sustainable energy technologies to drive economic development. Under this agenda, in regard to tackling the energy theme, the Call for Action of the

Agenda 2063 with regard to energy refers to *"harnessing all African energy resources to ensure modern, efficient, reliable, cost effective, renewable and environmentally friendly energy to all African households, businesses, industries and institutions, through building the national and regional energy pools and grids"* [4].

The energy theme of the Agenda is already gaining traction across the continent as governments have begun implementing the resolutions. For example 19 states have endorsed the Africa Clean Energy Corridor, which could increase the development of renewable energy projects from their present 12 percent of the East and Southern Africa Power Pool to at least 40 percent by 2030. By 2063, says the plan of action, renewables will provide more than half of the continent's energy which will be critical in improving access to modern energy which is part of Sustainable Development Goals as well [5]. Agenda 2063 concludes that "ensuring access to clean and affordable energy is a development imperative".

1.2 Energy and Sustainability

The supply of energy, more specifically electricity, is of utmost importance in the modern society globally. Aside from being a main driver of any economy by powering a wide range of industrial processes, electricity provides lighting, heating, cooling and transportation for households. Presently, electrical energy comprises of about 15% of the world energy demand. In the past couple of decades, empirical data has shown that consumption of electricity is strongly correlated to economic growth. The emergence of new economic giants in China, India and Brazil will increase the demand for electrical energy further [6].

According to the United Nations' World Commission on Environment and Development (WCED) through the Brundtland report of 1987 defines the concept of sustainable development as *development that meets the needs of the present without compromising the ability of future generations to meet their own needs*. It is therefore critical that in driving sustainable development the availability of energy sources which are environmentally friendly and affordable. Through the findings of this report there's a widespread consensus globally in changing the sources of electricity generation from the conventional fossil fuels which are considered unclean and unsustainable due to their enormous CO_2 emission and their finite amounts respectively [7].

Currently electricity globally is largely produced using coal, natural gas, hydro or nuclear as the primary energy source. It is important to mention that these generation technologies are generally affordable and reliable therefore widely used. Despite their attractiveness, fossil fuels and uranium have a disadvantage in their finiteness, making power generation from these sources unsustainable. Another disadvantage is the emission of green-house gases for example CO_2 for instance when burning coal, oil and natural gas for power generation that contributes immensely to global warming. However it should be noted that this disadvantage does not apply to nuclear technology which has its own unique challenge in the disposal of wastes [8]. Thirdly which applies to natural gas and uranium which are unequally distributed between regions across the globe, resulting in creation of fuel dependencies between them and the glaring possibility of invoking political influence. Large hydro does not share in these draw backs associated with fossil fuels and uranium, however globally a large potential of hydro has already been exploited especially in developed countries. In addition, hydro power in most cases requires creation of hydro reservoirs which results in flooding of huge tracts of land which has a devastating effect on the environment [7].

In recent decades, new power generation technologies are being developed to address the challenges facing power generating technologies mentioned above. Renewable energy technologies such as biomass, solar photo voltaic, geothermal, wind, tidal and wave power for generation of electricity [9]. The contribution of renewable energy in power generation has been increasing steadily for the last couple of decades even though it is still very low at about 2% of global energy demand. However renewable energy technologies have their own disadvantages in cost and controllability. The cost implication of renewable energy technologies is still high than conventional generation technologies and in most jurisdictions requires governmental support to make them feasible [10]. When these two key disadvantages are put into perspective, integration of large amounts of variable renewable energy into existing power systems is technically and economically challenging [11].

1.3 Wind Energy Potential and Opportunities in Kenya

Globally, wind energy has experienced remarkable growth over the last decade due to renewed public support and maturing turbine technologies. According to the International Renewable Energy Agency wind energy has experienced tremendous growth over the last decade. The global installed capacity increased from 238GW in 2012 to 435GW in 2015 [3].

In Kenya, Wind energy is one of the three main renewable-energy sources currently being exploited, the other two being solar and geothermal energy. It is a renewable electricity generation method involving conversion of kinetic energy of moving air masses into electricity.

The potential for wind generation in Kenya is one of the highest in Africa with a total of **346 W/m2**. The average wind speed in most parts of the country reaches over **6 m/s**, with areas in the north surrounding Lake Turkana (**over 9 m/s**) and the coast (**5-7 m/s**) being particularly attractive. There are between **10-20** locations with wind speeds greater than **7 m/s,** with middle to large wind turbines, a total of over **1 GW** could be achieved [12]. Figure 1.2 below shows the wind speed map of Kenya illustrating areas of considerable wind power potential.

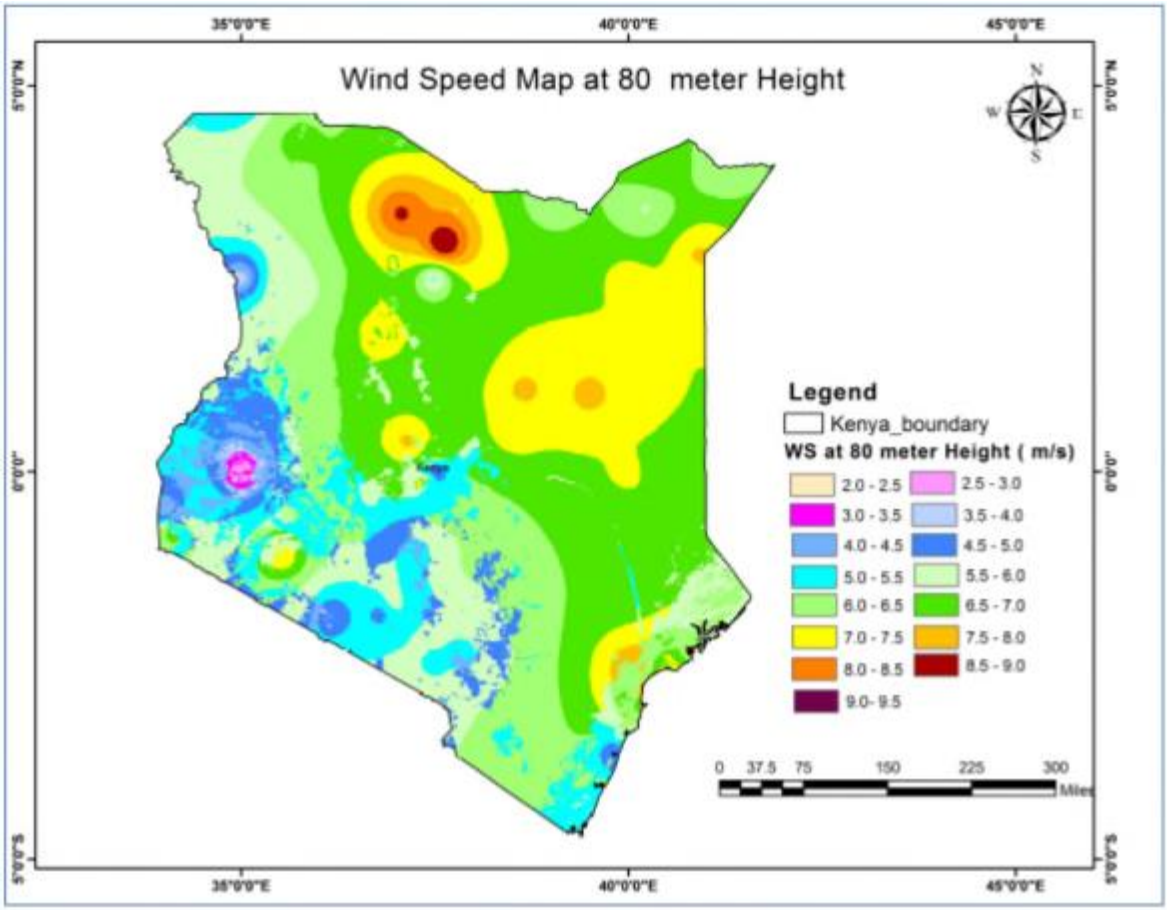

Figure 1.2: Wind Speed map of Kenya

Source: Wind Sector Prospectus-Ministry of Energy Kenya, September 2013 [12]

Under the Ministry of Energy and Petroleum, the Kenyan Government has initiated a several wind power projects. Currently on-going projects include the Turkana Wind Park which is near completion, Kipeto Energy Wind Park, Kinangop Wind Park, Ngong Wind Park Expansion, and the planned Mount Meru Wind Park. Overally, Kenya plans to increase its wind generation to **630 MW** by the end of 2018 as part of its 5000+ MW Plan to expand overall electricity generation. This is in addition to the current **25.7 MW** already in operation by KenGen at Ngong Wind Park [12].

Currently, Kenya has a fully operational grid connected 25.7 MW wind farm operated by KenGen. The Ngong Wind Park is located 22km South-West of Nairobi and currently it's the only wind farm connected to the grid. The first phase was commissioned in 1993 as a donation from the Belgian Government and consisted of two turbines with a capacity of 0.35MW. The second phase

was commissioned in August 2009 and has six turbines at a capacity of 5.1MW. It is owned by KenGen and cost KES. 1.6 billion (US$ 18 million). KenGen plans to expand it to 45.5MW.

The Ngong wind farm is powered by six Vestas V52 wind turbines producing about 0.3% of the total installed capacity. The Doubly-Fed Induction Generator (DFIG) turbines used by the plant have a hub height of 50m and rotor diameters of 52m. The turbines are connected to the Ngong Wind Substation and control via underground cables. The Ngong wind farm is then directly connected to the wider 66kV distribution network within Nairobi.

Also in the pipeline is the Lake Turkana wind power project with an installed capacity of 310 MW, which has been completed awaiting connection to the grid. The project is located at a remote location, approximately 12 kilometers east of Lake Turkana in northwestern Kenya. The project area falls within a valley between two mountains that produce a tunnel effect in which wind streams are accelerated to high speeds. The wind farm comprises 365 wind turbines of a capacity of 850 KW each. In addition to the Wind Turbine Generators (WTGs) and their foundations, a 33 kV electrical collector network has been constructed. This zero-emission project will also contribute in filling the energy gap in the country, enhancing energy diversification and saving 16 million tons of CO_2 emission compared to a fossil fuel-fired power plant.

The feed-in-tariff for wind energy is **11 USc/kWh,** requiring a minimum installed capacity of 0.5 MW and a lifespan of 20 years from the date of commissioning which make it attractive and

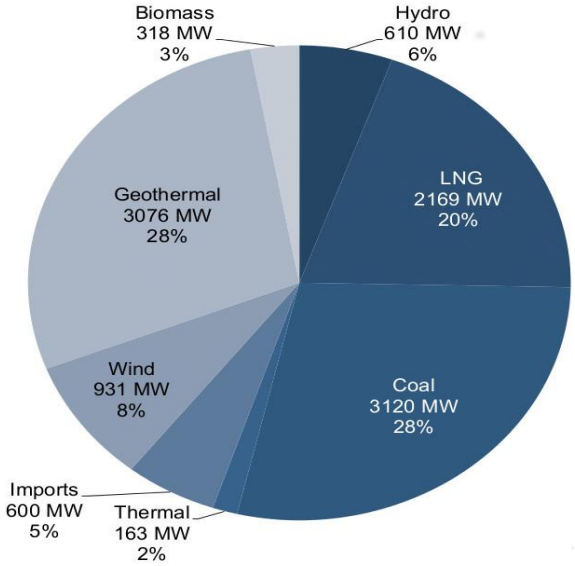

Figure 1.4: Projected generation mix in 2024

competitive in the electricity market [2]. Figure 1.4 shows the forecasted generation mix of Kenya by 2024 which clearly shows wind power will have a considerable proportion.

Source: ERC/ LCDP [2]

1.5 Problem Statement

Wind as an energy source is intermittent, non-dispatchable, variable, uncertain and unreliable. In electric grids with large-scale wind power penetration, this generation introduces great technical challenges due to stochastic variations in the power output of wind farms. Since imbalances between system load and generation must be compensated at all times for maintaining the AC frequency close to its standard value, determination and procuring of appropriate equivalent operating reserves is the main concern for power system operators.

By definition in this context, intermittent energy source is one that is not continuously available due to some factors outside direct control. Variability is the extent to which a power source may exhibit undesired or uncontrolled changes in its output. Uncertainty refers to changes in power system variables that are unexpected. Dispatchability is the ability of a given power source to increase and/or decrease output quickly on demand. Wind power is highly non-dispatchable.

Although a significant amount of work has been done on operating reserve requirement, most of these studies are focused on quantifying the spinning reserve capacity requirements, and only a little work pays attention to the different categories of reserve procured based on power imbalance drivers. This is critical to further minimize cost of operating reserve and more importantly minimize wind power curtailment.

This study seeks to present a probabilistic approach to quantify operating reserves requirement of a power system with large scale wind power integration through stochastic programming based on scenarios generated thorough Monte Carlo simulation. Further, an analysis was carried out to assess the impact of increased wind penetration in the sizing and allocation of operating reserve requirement and feasible conclusions made.

1.6 Problem Justification

At low penetration levels, the variable output of wind power plants is easily absorbed within the variability of the load. However, as the penetration level increases, the added variability and non-dispatchability of the wind resource can cause greater ramp-rates, greater inter-hour variability, and greater scheduling and forecast error which necessitates review and upgrade in the grid operations and even infrastructure in some cases. It is therefore important that power system operators take all these attributes of wind into consideration for effective and seamless integration of increased wind power generation into the utility's grid. In addition since the cost associated with provision of additional reserve capacity as a result of wind integration is far from being negligible, quantification of operating reserve has become a subject of intense interest for researchers and power engineers in the recent past

Power system operators face the challenge of dynamically quantifying the operating reserve requirement and allocating the appropriate category of the reserve to accommodate future wind power generation and minimize the cost of reserve respectively.

This research proposes formulation of a method for addressing this problem.

1.7 Objectives

1.7.1 Main Objective

The main objective of this study is to analyze the effects of large wind farms on the sizing and allocation of power systems operating reserve requirement.

1.7.2 Specific Objectives

a) To model a power system with variable wind and load data
b) To size operating reserve requirements to meet reliability levels hence,
c) To assess the effects of increased wind power generation on the spinning reserve resource

1.8 Scope of the Study

The study intended to establish the effect of integrating large wind farms to power grids on sizing and allocation of operating reserve requirement. The study focused on sizing an optimal reserve capacity that guarantees reliability of the power system with wind integration as well as minimize cost associated with provision of the additional reserve. The generator characteristics of the IEEE 30 bus test system was used in the model used for the study. The study used descriptive research design.

CHAPTER TWO

2.0 LITERATURE REVIEW

In the last couple of decades, the need to diversify power generation sources, increase security of supply, incorporating sustainability in energy sources and reducing fuel usage and emissions has significantly led to the integration of variable renewable energy sources (VREs) such as Wind power to power grids globally. Integrating VREs is far much less complicated if they are incorporated to large power systems which can take advantage of natural diversity of variable sources [13]. However as wind capacity increases, considerable measures have to be taken to ensure that the wind power variation does not reduce the reliability of the power system.

Wind power possess great challenges to power system operators in grid management and generation scheduling as a sudden and severe loss of generation might occur at a high penetration level of wind power. The inherent variability, intermittency and uncertainty that characterize wind power require that current industry practices be altered which necessitates a need to update unit commitment and operating reserve procurement algorithms to accommodate smooth integration [13], [6]. The additional variability and uncertainty introduced in the system will result in an increase in operating reserve requirement in the system to maintain reliability levels after wind integration [7]- [14]. The objective is to meet high load demand and withstand the impact of wind power fluctuations.

In existing literature and power engineering practice, operating reserves are subject to many different naming conventions in different regions across the globe. This study defines operating reserve as the real power capacity that can be called on at any instance of power imbalance between generation and load. Operating reserve allows system operators to compensate for unpredictable imbalances between generation and demand caused due to sudden outages of generating units, changes in generation from variable sources, uncertainty in load forecasting and unexpected deviations by generating units from their production schedules [15].

The requirement for additional reserve capacity is determined by critically monitoring the variation of wind power production, hourly and intra-hourly, together with load variations and prediction

errors [16]. Therefore accurate prediction tools such as numerical weather prediction are critical to wind integration as it contributes to risk reduction. Accuracy of wind power production forecasts depends on several factors such as the forecast horizon, the size of the wind power plants and their geographical dispersion, experience with wind power generation and the accuracy of the forecasts for individual wind power plants [17]. Wind power forecast errors (WFEs) increase as the forecast horizon gets longer [18]. Large geographical spreading of wind power will also increase predictability [19].

Since the cost associated with provision of additional reserve capacity as a result of wind integration is far from being negligible, quantification of operating reserve has become a subject of intense interest for researchers and power engineers in the recent past. In this regard, system models and analytical methods using time series of wind power production together with a host of other power system variables and constraints have previously been presented to estimate reserve requirement and the cost associated with it [20].

Statistical methods that rely on the use of the standard deviation (σ) like the n-sigma criterion are one of the most widely used to quantify the effects of increased wind power on operating reserves due to its simplicity. However, this method is most applicable in power systems where the wind power capacity is decentralized over a large geographical area with different wind flow regimes. Consequently, the variability of the total wind power injections is attenuated, even more with increasing number of wind turbines (WTs) installed at different locations [21]. Under these circumstances, both wind power variability and wind forecast errors (WFE) are assumed to follow the Gaussian distribution [22]. Suffice to mention, wind variability and forecast errors do not necessarily follow a Gaussian distribution [23].

Alternatively, sophisticated probabilistic methods can be deployed to quantify operating reserve by integrating different sources of uncertainties using reliability theory of power systems [24]. They are based on generation margin which is defined as the difference between the total available generation and load. Classical reliability indices such as loss of load expectation (LOLE), loss of load probability (LOLP) and expected energy not supplied (EENS) are calculated based on the distribution of the generation margin and used in the sizing of appropriate operating reserve levels.

This chapter summarizes recent work on the determination of operating reserve requirement for power systems with large scale wind integration with the main focus on solution approaches on the sizing and allocation of different categories of operating reserves. It also highlights the different methods incorporated in solving the optimization problem in the balancing between economics and reliability of the power system in the sizing and allocation of operating reserve requirement. Eventually, research gaps are identified after a thorough evaluation of existing methodologies in this field of research.

2.1 Relationships between wind penetration and operating reserve

Wind power generation is a variable energy resource with changing availability level over the time (variability), which cannot be predicted with perfect accuracy (uncertainty) [23]. As wind power increases, the additional variability and uncertainty introduced in the system resulting in an increase in system imbalances which causes an increase in demand for operating reserves in the system [25].

However, the impact of wind power on operating reserves is not same for all power systems. The degree of impact changes according to the wind power penetration level, time scale of reserves, geographical spread of wind power, the way the power system is operated and correlation of wind power with load and other source of variable generation units. According to [26] low levels of wind power penetration have insignificant impact on operating reserves to keep the system security in reliable levels. While the increase estimates for operating reserves at 10% and 20% of wind power penetration, respectively, are between 1–15% and 4–18% of installed wind capacity [27].

The impact of wind power on operating reserve requirement differs depending on different time scales. According to existing literature, as general rule it is widely accepted that primary power reserves – from a contingency event viewpoint – remains unaffected as wind power increases [28], [29]. This is because wind power plants do not change the largest single severe contingency (largest generation unit) if fault ride through capability is assumed [30], [31]. Moreover, due to the spatial variations of wind from turbine to turbine in a wind farm, the sudden and simultaneous trip-off of all WTs due to a decrease of wind speed is not a credible event [32].

During normal operation, the impacts of wind generation on operating reserves are usually classified into two main categories: those impacts that arise because of the natural variability of the wind (short term, inside an hour), and those that are caused by the uncertainty of wind injections (forecasting error) [33].

2.1.1 Variability of wind power

'Variability' of wind power refers to the undesired and uncontrolled output fluctuation derived from the natural resource availability, even if the forecast is accurate as shown in figure 2.1 [34]. Being undesired, the variability of wind power can be reduced through the well-known smoothing effect [35]. The smoothing effect becomes more pronounced as more WTs and wind power plants are connected to the grid and spread over a wider geographical space. Nevertheless, at some stage, the smoothing effect will saturate and adding more turbines or sites will not result in a variability attenuation [36].

The extent of variability of wind power also reduces as the desired settlement period in question decreases [37]. For instance, in the time frame of primary reserves (very short term), wind power variability is strongly smoothed [38]. As a consequence, the effect of wind power on primary reserves can be neglected [24]. Indeed, various studies and practical experience have shown that the impacts of wind variability on operating reserves are mainly observable in the time range of 10–15 min, thus strongly affecting secondary power reserves [39]. Variability in longer time scales than the dispatch period is captured by the dispatch, so reserves need to cover only the variability within the dispatch period.

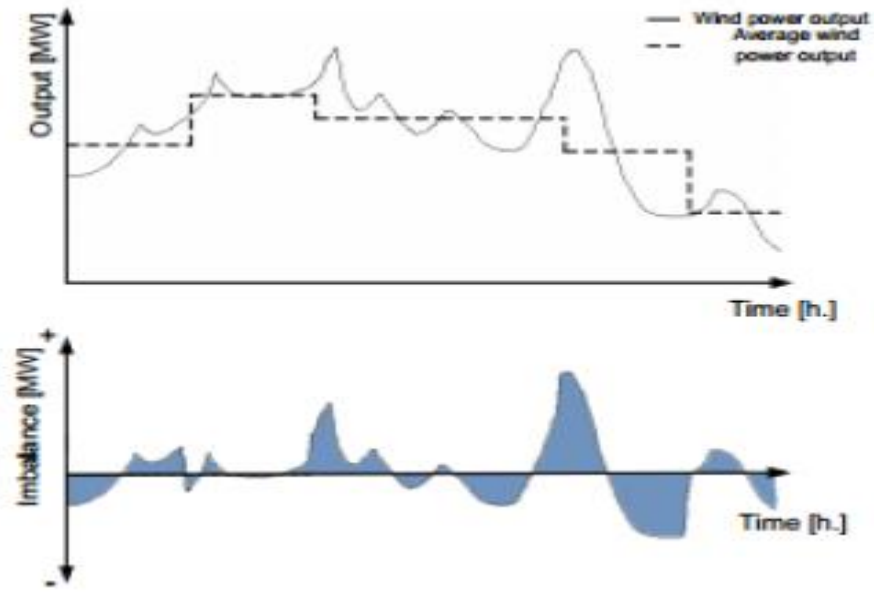

Figure 2.1: Short-term wind power output fluctuations

Source: Reference [33]

2.1.2 Uncertainty of wind power

'Uncertainty' of wind power refers to the difference between a perfect forecast and the actual forecast over a settlement period as shown in figure 2.2 [34]. Accuracy of wind power production forecasts depends on several factors such as the forecast horizon, the size of the wind power plants and their geographical distribution, experience with wind power generation and the accuracy of the forecasts for individual wind power plants [40]. Large-scale shut down of WTs due to storm events can lead to large forecast errors. Wind power forecast errors increase as the forecast horizon gets longer [41]. Large geographical spreading of wind power will also increase predictability [42], [10].

WFEs have a large impact on power system reserves in the time range of 1 hour [38] that is in the time frame of tertiary power reserves.

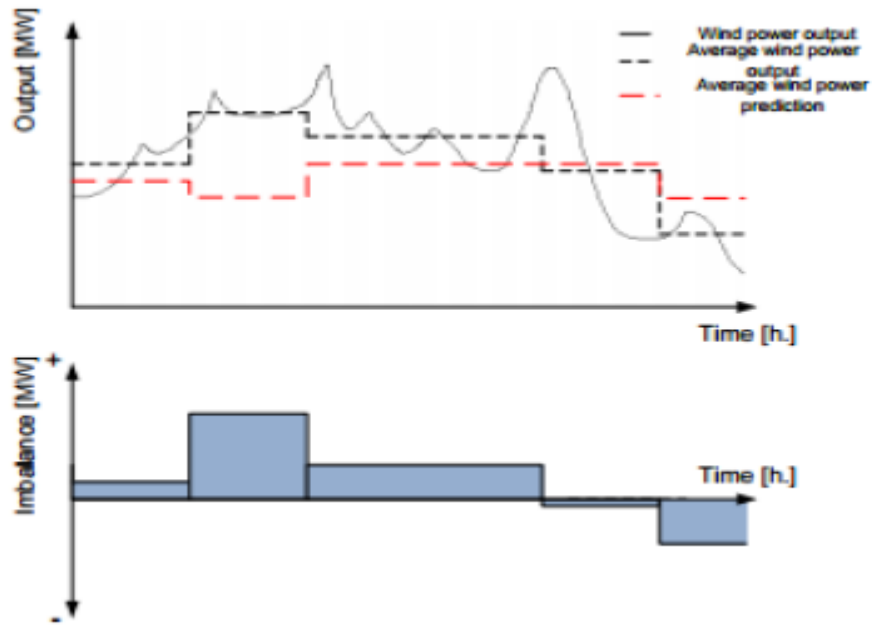

Figure 2.2: Wind power forecast errors

Source: Reference [33]

2.2 Problem formulation according to past studies

Problem formulation in quantifying additional reserve requirement is mostly anchored on balancing minimization of operating cost with guaranteeing required reliability levels while considering other system constraints.

In formulating the objective function the aim is not to be overly conservative in scheduling additional operating reserve racking up costs unnecessarily while also not excessively minimize cost to levels compromising system security. The objective function of the reserve allocation problem in [29] is given as

$$min\left(\sum_{i=1}^{N_R} \rho_i R_i\right) \quad (2.1)$$

Where N_R- number of generators to provide operation reserve, R_i - is the selected reserve of the generator, ρi- is the reserve cost of generator i. LOLP- is Loss of Load Probability which a reliability index [25].

An illustration of the cost (reserve) / reliability curve (EENS) is shown in figure 2.3.

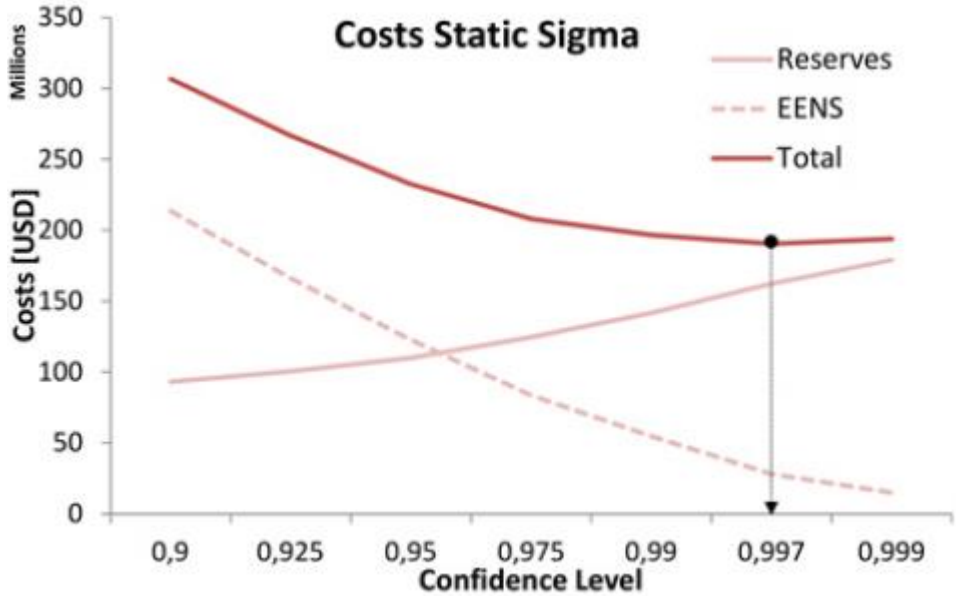

Figure 2.3: Cost (reserve) / reliability curve (EENS)

Source: Reference [22]

Matos *et al* (2011) focusses on the day-ahead allocation of operation reserve considering wind power forecast error and network transmission constraints in a composite power system [32]. The authors in their methodology were determined to minimize operating cost associated with allocation of operating reserve while at the same time meeting required system reliability levels.

Claudia *et al* (2015) seeks to demonstrate economic benefits of using a probabilistic-dynamic approach (PDA) in the quantification of operating reserves as opposed to the traditional quantification methods. The PDA considers conventional generation outages; load and wind forecast uncertainty on an hourly basis; and load and wind variability in 10 min time frame. The authors' objective was to determine the amount of operating reserves hourly in real time that minimizes the total cost of the power system, that is, the sum of the operating costs and the socioeconomic costs related to the EENS [23].

Chen *et al* (2013) address the critical problem of spinning reserve (SR) allocation for active power dispatch with large-scale wind power penetration. In particular the SR allocation for a multi-area power system where not well optimized SR allocation may make the inter-zonal reserve supplies

constrained by the transmission interface limits jeopardizing the operational security of the power system. The objective of the study is to ensure operational risk is shared evenly among all sub-areas in SR allocation to avoid the possibility of a large blackout or wind power curtailment while considering economic and technical constraints [24].

Antony *et al* (2011) used stochastic programming approach for quantifying reserve allocation based on scenarios generated by Monte Carlo Simulation. The objective was to demonstrate the benefits and drawbacks of the stochastic approach in reserve allocation by a comparison to deterministic approaches. This approach was found to be attractive as it enabled co-optimization of generation schedules and reserve requirement in the same problem formulation. It outperforms deterministic models in analyzing economic impacts of wind integration as it provides a means of assessing the sensitivity of operating costs in wind integration levels. However, it was found to present significant challenges in developing appropriate scenarios to be used as input to the stochastic programming model as well as computational intractability of the resulting problem [25].

Shu *et al* (2012), the authors seek to address the problem of how to determine and schedule the additional SR requirement due to wind power fluctuation, more particularly how to jointly dispatch SR with power generation economically. Authors aim to investigate utilizing automatic generation control (AGC) units in both power supply to meet load demand as well as providing spinning reserve [43].

Using actual wind power and load data for two grids (ERCOT and MISO) in the US, Brandon *et al* (2013) aimed to demonstrate that both wind power and load forecast errors do not follow the normal distribution discrediting statistical approaches such as n-sigma criterion that assume this distribution in quantifying operating reserve. Authors demonstrate that using net load forecast error the dispatchable operating reserve requirement can be quantified based on certain reliability levels required [26].

In general operating reserve allocation problems consider the following operational constraints in their formulation

LOLE threshold constraint: The resultant LOLE value after operating reserve allocation must be less than or equal to the incumbent LOLE to guarantee required levels of operational reliability of the power system.

Active power balance constraint: This requires that power balance between active power generation and load demand must be kept at all times during normal operations of the power system as expressed in the equation below

Conventional power generation+ Wind power = Load Demand +Losses

Unit capacity constraint: Generation units usually have operational maximum and minimum power output limits within which the unit output must be maintained.

Ramp rate limits: The ramp rate limits confine the power output increase or decrease between adjacent hours for certain units.

Transmission interface capacity constraints: The transmission capacity limits must be observed for accurate operating reserve allocation to ensure the reserve can be evacuated to demand centers without overloading the lines.

2.3 Solution approaches to quantifying operating reserve

In the past several years, various researchers and organizations have participated or initiated wind power integration studies. The spine of each study is to evaluate the incremental need for additional operating reserves for the future system that result from high wind penetration. Basically study teams propose needed changes to maintain reliability while accommodating the variability and uncertainty present in the wind power. In most studies, statistical methods are used in the analysis and modelling of wind power time series data which forms a basis for quantification of operating reserve. Significant progress has been on methodologies used to compute these values as successive studies addressed shortcomings of past studies. The most recent studies evaluating very high penetrations are using sophisticated methodologies that are diverging further from the traditional methods used today in actual system operations [30]. Generally methods to determine additional operating reserve can be classified as follows:

2.3.1 Statistical approaches

These rely on historical data of wind power and load which are analyzed to establish their statistical properties [13]. A commonly known statistical approach is the n-sigma criterion that is based on a comparison of the load and net load time series data, where net load is defined as load minus wind power production [15]. The probability distribution function of the net load is used to quantify additional operating reserve due to wind power integration at different time scales. Therefore assuming these data sets to be uncorrelated, the standard deviation of the net load time series is obtained as [9]

$$\sigma_{NL} = \sqrt{{\sigma_L}^2 + {\sigma_W}^2} \quad (2.2)$$

Where σ_l and σ_w are the standard deviations of the load and wind power time series respectively. From the analyzed time series of load and wind power data either variability or forecast error deviations can be established. The additional reserve ΔRes due to wind power integration can then be quantified according to [16]

$$\Delta Res = n(\sigma_{NL} - \sigma_L) \quad (2.3)$$

The multiple n is defined a priori and represents the confidence level (CL) used. It varies from one power system to another. The remaining uncertainty not covered by n is met by energy balancing using the spot market.

According to literature review quite a number of studies have incorporated statistical approach in quantifying operating reserve requirement. Wang *et al* (2008) proposed a model to incorporate the uncertainty of wind forecasts in unit commitments [29]. Doherty et al (2003) presented a reserves procurement model that combines wind forecast uncertainty with load forecast uncertainty and generator forced outage probabilities [28].

Ortega *et al* (2009) and Matos *et al* (2011) each presented decision analytic frameworks to determine operating reserves in systems with wind power by balancing the cost of reserves and the cost of load curtailments [19], [20]. Bouffard *et al* (2008) presented an economic dispatch algorithm that accounts for wind forecast uncertainty [29]. In these studies cited above statistical approach is applied, wind and load forecast errors are generally modelled using Gaussian distribution. On the contrary references [24], [31], [33] show that wind and load forecast errors are not normally distributed and demonstrate that wind forecast errors have distributions that can be

highly skewed when the forecast is for a very low or high value of wind power. Wind forecasts near the middle of the forecast range have more symmetric error distributions (although not necessarily Gaussian). Fig. 7 illustrates typical wind forecast errors as reported in [38].

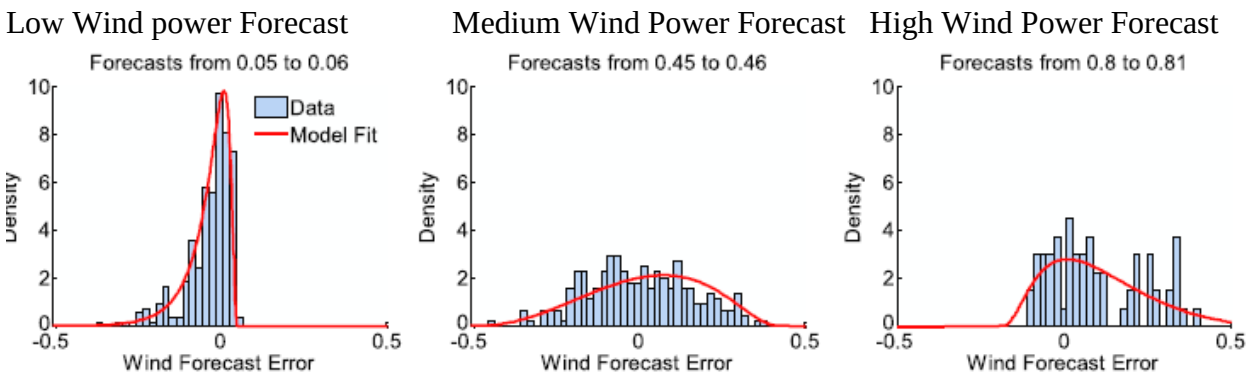

Figure 3.4: Wind power forecast error distributions at three different wind forecasts.

The forecast horizon considered for wind power is therefore critical in determining more accurate results of operating reserve requirement using the statistical approach.

2.3.2 Probabilistic approaches

In more recent studies, reliability theory of the power system has been used to quantify operating reserve by integrating different sources of uncertainty [42]. Probabilistic approaches are based on system generation margin (SGM) which is defined as the difference between the total available generation and load demand. The SGM is a function of two random variable which makes it a random variable [15], [18]. In computation of SGM distribution, the probability distribution of CG, Wind Power generation W and load L must be considered.

SGM=CG+W-L…….. (2.4)

For a specific level of reserve R, the distribution of SGM+R describes the probability that R is sufficient to cover the deficit in generation. Usually the SGM distribution forms a basis for calculation of classical reliability indices such as LOLE, LOLP and EENS [40]. Operating reserve requirement are computed to meet these indices.

Jianxue *et al* (2016) present a two-level model that solves the allocation problem for composite power system. The upper model allocates operation reserve among the subsystems from the economic point of view while the lower model evaluates the system in the reserve schedule considering reliability levels. Optimization of the reserve allocation to achieve balance between reliability and economy is achieved through iteratively adjusting the reserve requirement by the upper model with the resulting reliability indices from the lower model [22].

Claudia *et al* (2015) proposed a probabilistic-dynamic approach to quantify different operating reserve categories within a real-time system operation is based on an iterative process where the total costs (operating cost and cost of expected energy not supplied EENS) of the system are minimized. The PDA considers CG outages; load and wind forecast uncertainty on an hourly basis; and load and wind variability in 10 min time frame. The study demonstrates economic benefits of using a probabilistic-dynamic approach (PDA) in the quantification of operating reserves as opposed to the traditional quantification methods in power systems with high penetration levels of wind power [23].

Chen *et al* (2013), authors propose a risk-based multi-objective SR optimization model which considers coordination of multiple control sub-areas to effectively handle the problem of local reserve inadequacy and transmission interface load. A probabilistic approach that considers forced outages of generators and forecast errors of load and wind power is used to establish relationship between SR allocation and LOLE. The resultant SR allocation problem is multi-objective. Fuzzy optimization method is used to transform the multi-objective optimization problem to a single-objective problem which can easily be solved. The single-objective problem characterized by non-linearly coupled and not continuously differentiable constraints is solved using Particle Swarm Optimization (PSO) method [24].

A two-stage stochastic programming model for committing reserves in systems with large amounts of wind power is presented by Brandon *et al* (2013). The first stage formulates the UC problem of slow generators while the second stage formulates the hour-ahead economic dispatch problem for the entire system given the fixed day-ahead schedule of slow generators. Scenarios representing daily wind time series based on probability of occurrence are selected as part of input to the stochastic program. Lagrangian relaxation decomposition algorithm is used for solving the stochastic program [26].

Shu *et al* (2012) propose a joint optimization dispatch model of active power and additional SR requirement using AGC units for wind power integration systems. In formulation a model to accomplish this, both the probabilistic distributions of load and wind forecast errors were introduced to deal with uncertainties. Multiple scenarios are adapted to simulate the fluctuation of wind power and load. The actual output of AGC generators is adjusted according to the AGC unit modification strategy in each scenario [43].

Despite the attractive features presented by probabilistic approaches, the complexity of the formulated problem introduces computational intractability that can be rather time consuming to solve. However recent increased availability of high speed computing coupled with reduction in costs means that this problem can be overcome.

A summary of the general concept, advantages and disadvantages of the statistical approaches and probabilistic approaches are given in Table 1.

Approach	**Advantages**	**Disadvantages**
<u>Probabilistic :</u> Probabilistic approaches are based on system generation margin (SGM) which is defined as the difference between the total available generation and load demand. Reliability theory of power systems is incorporated in quantifying of operating by integrating different sources of uncertainty. Usually the SGM distribution forms a basis for calculation of classical reliability indices	Dynamic reserve allocation at desired time interval which eliminates the need to hold large amounts of reserve at every instant.	Computational intractability due to the complexity of the resultant problem.
	Allows incorporation of a variety of sources of uncertainty (variables) in determination of operating reserve which makes it more practical.	Significant challenge presented in selecting appropriate scenarios and their probabilities.
	Uses an optimal CL determined based on a cost benefit analysis considering	

such as LOLE, LOLP and EENS. Operating reserve requirement are computed to meet these indices.	operating cost and reliability of the system.	
<u>Statistical:</u> Relies on historical data of wind power and load which are analyzed to establish their statistical properties. A commonly known statistical approach is the n-sigma criterion where the probability distribution function of the net load (Load – Wind Power) is used to quantify additional operating reserve due to wind power integration at different time scales.	Results in relatively simple problem formulation hence provides quick solutions to operating reserve determination.	Static reserve allocation which results in unnecessarily holding of large amounts of reserve increasing costs.
	Useful as an easier way of providing an approximation close to reality of reserve determination.	Assumes WFE and variability follows Gaussian distribution which is not necessarily the case
		Quantifies operating reserve based on CL defined a priori.
		It is implicitly assumed that present and future behavior of the power system resembles observations of the past. If this assumption is not valid, the sigma criterion – or any statistical approaches – will fail.

2.4 Wind Power Generation

Wind energy is created when the atmosphere is heated unevenly by the sun, some patches of air become warmer than others. These warm patches of air rise, and the cooler air rushes in to replace them – thus, wind blows. Thus, wind energy is a renewable electricity production from converting the kinetic energy of moving air masses into electricity.

A wind turbine extracts energy from moving air by slowing the wind down, and transferring this energy into a spinning shaft, which usually turns a generator to produce electricity. The power in the wind that's available for harvest depends on both the wind speed and the area that's swept by the turbine blades.

Two types of turbine design are possible; horizontal axis and vertical axis. In horizontal axis turbine, it is possible to catch more wind and so the power output can be higher than that of vertical axis. But in horizontal axis design, the tower is higher and more blade design parameters have to be defined. In vertical axis turbine, no yaw system is required and there is no cyclic load on the blade, thus it is easier to design. Maintenance is easier in vertical axis turbine whereas horizontal axis turbine offers better performance.

Wind power varies over time, mainly under the influence of meteorological fluctuations and these variations occur on all time scales. Understanding these variations and their predictability is of key importance for the integration and optimal utilization of wind in the power system.

2.4.1 Wind Turbine Generators

Wind turbine generators (WTGs) extract the kinetic energy in the wind and convert it into electricity via an aerodynamic rotor, which is connected by a transmission system to an electric generator [39]. Today's mainstream WTGs have three blades rotating on a horizontal axis, upwind of the tower (Figure 3.1 (a)). Two-blade WTGs and vertical-axis WTGs are also available.

Generally, a WTG can begin to produce power in winds of about 3 m/s and reach its maximum output around 10 m/s to 13 m/s. Power output from a WTG increases approximately by thrice the power of wind speed. Power output can be controlled both by rotating the nacelle horizontally

(yawing) to adapt to changes in wind direction, and rotating the blades around their long axes (pitching) to adapt to changes in wind strength.

The capacity of WTGs has doubled approximately every five years, but a slowdown in this rate is likely for onshore applications due to transport, weight and installation constraints. Typical commercial WTGs at present have a capacity of 1.5-3MW; larger ones can reach 5-6MW, with a rotor diameter of up to 126m [41].

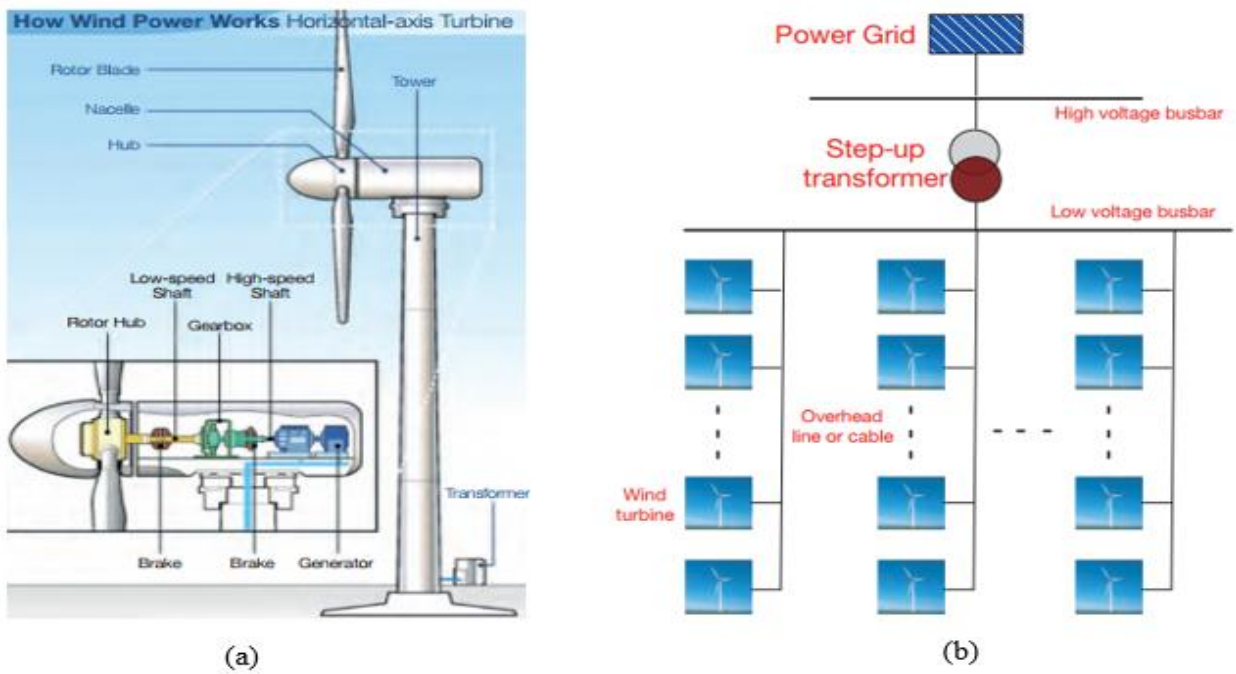

Figure 2.5: Structural diagram of (a) a horizontal-axis wind turbine (b) a wind farm

A wind power plant (WPP, usually called a "wind farm") normally consists of many WTGs connected together by overhead lines or cables (Figure 3.1 (b)).

2.4.2 Types of Wind Turbine Generators

Type 1: Fixed-Speed Induction Generator

Type 1 WTGs are based on a squirrel cage induction generator (SCIG). Its structure and performance as shown in Figure 3.2 depends on the features of mechanical sub-circuits, e.g., pitch control, time constants etc. The reaction time of these mechanical circuits may lie in the range of tens of milliseconds. As a result, each time a burst of wind hits the turbine, a rapid variation of

electrical output power can be observed. These variations in electric power generated not only require a firm power grid to enable stable operation, but also require a well-built mechanical design to absorb high mechanical stress, which leads to expensive mechanical structure, especially at high-rated power. Because induction generators absorb a lot of reactive power when generating active power, type 1 WTGs are generally equipped with reactive power compensators.

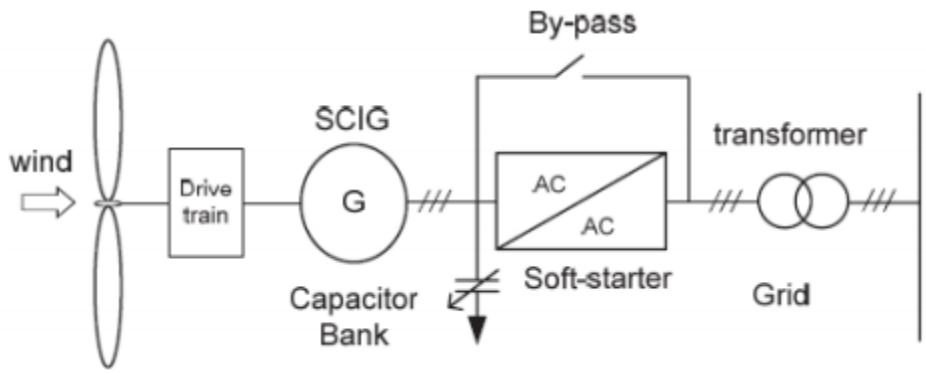

Figure 2.6: Fixed-speed wind turbine with SCIG

Type 2: Variable-Speed Induction Generator

Variable speed turbines have become the most dominating type of the yearly installed wind turbines as they can store some of the power fluctuations due to turbulence by increasing the rotor speed and pitching the rotor blades, these turbines can control the power output at any given wind speed. Figure 3.3 shows a variable speed turbine connected to a SCIG. Type 2 WTGs are equipped with a wound rotor induction generator (WRIG). Power electronics are applied to control the magnitude of the WRIG's rotor current, which allows a speed variation of 10 % up and down, improving power quality and reducing the mechanical loading of the turbine components. Type 2 WTGs are equipped with an active pitch control system. Like type 1 WTGs, type 2 WTGs are also generally equipped with reactive power compensators.

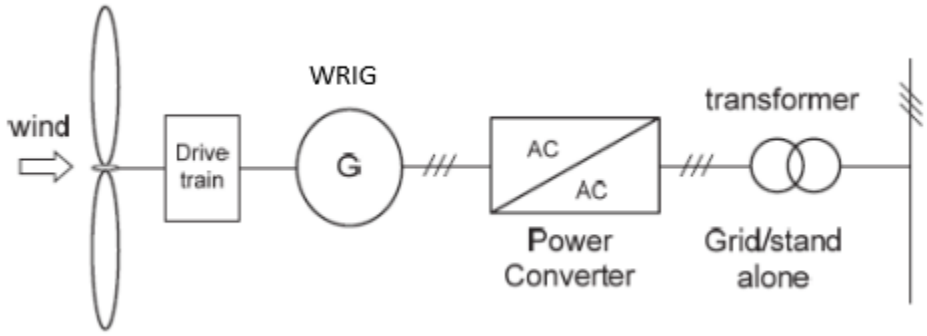

Figure 2.7: Variable-speed wind turbine with WRIG

Type 3: Doubly-Fed Induction Generator

The DFIG, as shown in Figure 3.4, consists of a stator connected directly to grid, and a rotor which is connected to grid via slip rings through a four-quadrant ac-dc-ac converter based on insulated-gate bipolar transistors (IGBTs). The DFIG is the most popular WTG at present as it combines the advantages of previous WTG designs with advances in power electronics.

This system, with the help of the converter, offers the following advantages over the others:

- Reduced inverter cost, because inverter rating is typically 30% of total system power.
- Improved system efficiency.
- Power factor control can be implemented at lower costs.
- It has a complete/decoupled control of active and reactive power.
- Fast voltage control, recovery and voltage ride-through

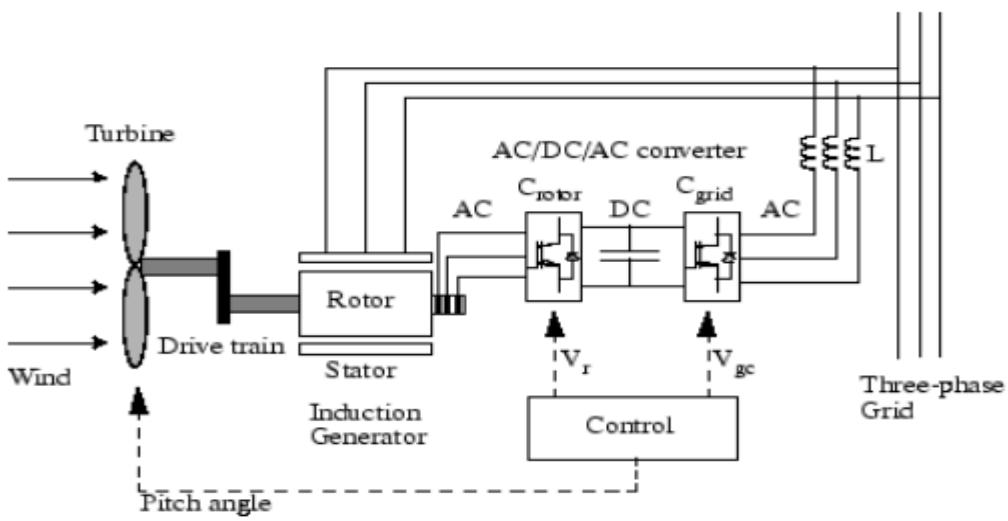

Figure 2.8: DFIG wind turbine generator system

Principle of Operation of the DFIG

When the rotor speed is greater than the rotating magnetic field from stator, the stator induces a strong current in the rotor. The faster the rotor rotates, the more power will be transferred as an electromagnetic force to the stator, and in turn converted to electricity which is fed to the electric grid. The speed of asynchronous generator will vary with the rotational force applied to it. Its difference from synchronous speed as a percentage gives the generator‘s slip. With rotor winding short circuited, the generator at full load is only a few percent.

C_{rotor} and C_{grid} have the capability of generating or absorbing reactive power and can be used for controlling the reactive power or the grid terminal voltage. The pitch angle is controlled to limit the generator output power to its normal value for high wind speeds. The grid provides the necessary reactive power to the generator.

The main reason for the popularity of these generators connected to the national networks is their ability to supply power at constant voltage and frequency while the rotor speed varies.

Type 4: Full Power Conversion Generator

In a type 4 WTG (Figure 3.5), both the rotor and stator of the generator are connected to the grid via a full power back-to-back IGBT power converter, which means all the power output goes to the grid through the converter. The generator may be a synchronous generator with wound rotors, a permanent magnet generator or a SCIG. The gear box may be classical (drive-train), a low speed step-up one (half direct-drive), or there may even be no gear box (direct drive). A type 4 WTG has similar characteristics to type 3 and, since it is completely decoupled from the grid, it can provide an even wider range of speed variation as well as reactive power and voltage control capability. In addition, its output current can be modulated to zero, thereby limiting the short circuit current contribution to the grid.

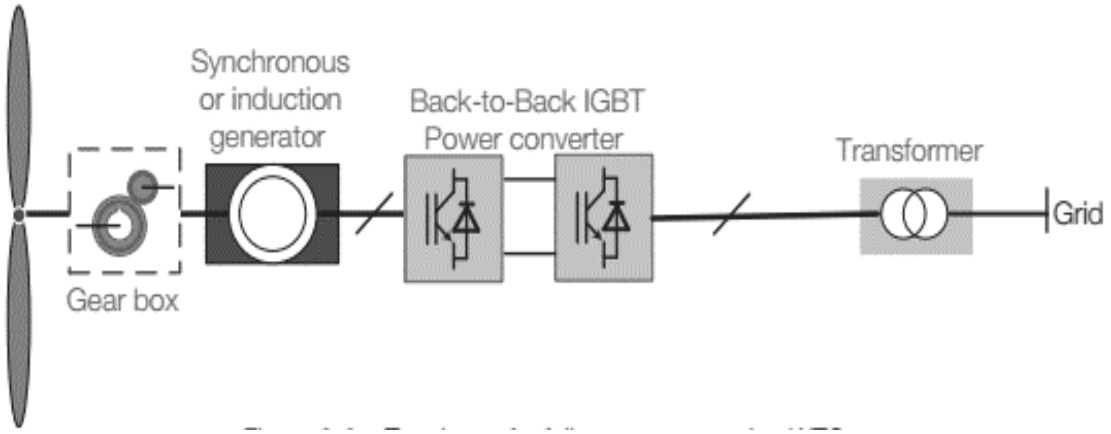

Figure 2.9: Full-power conversion WTG

2.4.3 Wind Turbine Characteristics

Wind turbines produce electricity by using the power of the wind to drive an electrical generator. Passing over the blades, wind generates lift and exerts a turning force. The rotating blades turn a shaft inside the nacelle, which goes into a gearbox. The gearbox adjusts the rotational

speed to that which is appropriate for the generator, which uses magnetic fields to convert the rotational energy into electrical energy. The power output goes to a transformer, which converts the electricity from the generator to the appropriate voltage for the power collection system.

A wind turbine extracts kinetic energy from the swept area of the blades [8]. The power contained in the wind is given by the kinetic energy of the flowing air mass per unit time. That is;

$$P_{air} = 0.5\rho A V_{\infty}^{3} \tag{2.5}$$

Where P_{air} is the power contained in wind (in watts) , ρ is the air density (1.225 kg/m^3 at 15°C and normal pressure), A is the swept area (in square meter), and V_{∞} is the wind velocity without rotor interference (in meters per second), i.e., ideally at infinite distance from the rotor.

Although the above equation gives the power available in the wind, the power transferred to the wind turbine rotor is reduced by the power coefficient, C.

$$C_p = \frac{P_{wind\ turbine}}{P_{air}} \tag{2.6}$$

$$P_{wind\ turbine} = 0.5\rho C_p A V_{\infty}^{3} \tag{2.7}$$

Maximum value of C_p is defined by the Betz limit, which states that a turbine can never extract more than 59.3% of the power from an air stream. In reality, wind turbine rotors have maximum C_p values in the range 25-45% [44].

2.4.4 Wind Speed Characteristics

The performance of WTGs on a particular site depends on the wind speed characteristics and their corresponding power curves. During high demand periods, wind power can replace one or more peaking and, typically, expensive controllable units. On the other hand, if wind power generation is significant during periods of low demand, the system operators can reduce the output of the base load and non-flexible conventional units [45].

Since the shape of the daily wind power generation depends on the diurnal wind speeds pattern, the wind speed model must reflect this characteristic. The diurnal wind-farm power generation pattern has a direct influence on the scheduling of the controllable resources.

The Weibull distribution is a mathematical expression that provides a good approximation to many measured wind speed distributions. This technique is widely accepted and used in the wind energy industry as the preferred method for describing wind speed variations for a given set of data [37]. The Weibull distribution probability density function (p.d.f) is expressed as:

$$f(v) = \frac{k}{c}\left(\frac{v}{c}\right)^{k-1} exp\left\{\left(\frac{v}{c}\right)^{k}\right\} \tag{2.8}$$

Similarly, the Weibull distribution cumulative distribution function (c.d.f) is given as:

$$F(v) = 1 - exp\left\{-\left(\frac{v}{c}\right)^{k}\right\} \tag{2.9}$$

Where “c” is the scale parameter (in meters per second) and “k” is the shape parameter.

$$c = \frac{\bar{v}}{\Gamma\left(1+\frac{1}{k}\right)} \tag{2.10}$$

$$k = \left[\frac{\sigma}{\bar{v}}\right]^{-1.086} \qquad (1 \leq k \leq 10) \tag{2.11}$$

Where $\bar{v}$ is the mean wind speed and σ^2 the variance.

The shape parameter k represents the unit-less shape factor that reflects the breadth of the distribution. Lower values of k correspond to broad distributions where the wind speed tends to vary widely, while higher values of k correspond to tighter distributions where the wind speeds tend to stay within a narrower range.

The scale parameter c, on the other hand, describes how much the distribution is stretched along the horizontal axis. The scale parameter c is directly related to the mean wind speed for a given value of the shape parameter k. The higher the value of c the higher the mean wind speeds are.

These two parameters are important in describing the wind power potential of a particular site. It is, therefore, important to estimate these parameters when analyzing Weibull distribution for experimental data. Some of the methods used to determine the values for k and c include; graphical method, maximum likelihood method, least square method and standard deviation method [44].

2.5 Challenges facing wind power integration to power grids

Despite the attractive features associated with wind power such as increasing security of supply and reducing greenhouse emissions, wind power has some negative impacts on the power systems which are generally categorized as short term and long term effects. On the short-term, there are several effects regarding the operation of the system; the need of voltage management, cycling losses, transmission or distribution losses, increase in operating reserves and wind curtailment, whereas on the long-term the impacts relates to the system reliability [44].

For wind power, voltage regulation is critical to maintain required and stable voltage levels through reactive power compensation. This compensation is handled at site where the wind farms are located. Tremendous progress has been made in developing advanced and intelligent wind turbine technologies that are able to adjust their reactive power and effect the wind farms on voltage regulation. This has therefore reduced the need for additional equipment at site to carry out voltage management hence minimizing operation cost [11].

In addition, another detrimental impact of wind power is the stochastic deficiencies in generation to the power system resulting in power imbalances. This impact is most significant to the power system especially at high penetration levels of wind power. Other conventional plants begin to operate in partial load condition caused by the variability and uncertainty of wind power. Therefore the start-ups, shutdowns and ramping rates of conventional generators also increases. In essence all of these cause the conventional generators to decrease their lifetime. This is due to plant and equipment wearing [17].

On the transmission and distribution part of the power system, wind power has negative or positive impact on this part depending on whether the wind farm is located close to the load or far from it. If the wind farm is located far away from load centers it results in losses along the line as power is transmitted over long distances and the vice versa is true for shorter distances (decreased losses).

Additionally, building wind farms far from the load results in increased capital costs of the project in building new long distance transmission lines to evacuate the large power to the grid [42].

Lastly on the short term effects is the concern of probability of wind power curtailment. At higher wind penetration levels sometimes it becomes absolutely necessary to discard excess wind power in order not to shut down the thermal generating units on partial load. Instances of wind power curtailment are mostly occasioned by forecast errors in wind speeds since it is impossible to have absolutely perfect predictions [45]. The impact on operating reserve being a short term effect will be discussed in detail in this study being the main objective.

In the case of long term effects, it is the responsibility of the power system operators to determine the ability of the current generation units to meet the peak demand in the long term. This critical function is evaluated based on power system reliability indices such as loss of load probability and expected energy not supplied. Under these circumstances the ability of wind power in replacing conventional generators is known as capacity credit. However it is important to note that increasing wind penetration level beyond a certain limit does not increase the capacity credit but reduces since more conventional generators will have to be brought online to provide operating reserve due to increased wind penetration and guarantee stability and reliability of the power system [37].

Another long term effect wind power introduces to the power system is the stochastic variation in the supply of power. Although variability already exist I the power system due to variation in load demand, these variations are more predictable and have a tendency to follow a particular trend known to power system operators. Although the forecasting techniques of wind power forecasting are constantly being improved for instance through sophisticated techniques such as numerical weather forecasting, it is not expected to reach the same accuracy levels as those of load forecasting [8].

Finally there is the challenge of wind power prediction errors. This greatly impacts on the power balance as well as the stability and reliability of the power system. The accuracy of the prediction varies depending on the time horizon of the prediction. The smaller the time horizon the more accurate is the wind power prediction. Also the more geographically spread the wind farms are the better the prediction as this minimizes the errors [14].

2.6 Power System Reliability

In power systems, *reliability is defined as a measure of the ability of the power system to deliver electricity to all points of utilization within accepted standards and in the amount desired, for the period of time required, under the operating conditions intended*. Reliability analysis serves as the basis to develop standardized quantities for planning and operation of the power system so as to avoid catastrophic failures [46].

The power system contains several uncertainties which can be categorized into: *generation uncertainties, transmission line capacity uncertainties* and *system load uncertainties*. Generation uncertainties include generating units with failure and repair rates generating capacity associated with probability. Transmission line capacity uncertainties comprise of failure and repair rates for the transmission line and transmission line capacity associated with probability. System load uncertainties vary with time and entail constructing load distribution from history [27].

The power system is complex and large. It is thus difficult to analyze the entire system at once. For this reason the power system is generally divided into three main hierarchy levels for reliability evaluation: *generation systems, transmission systems* and *distribution systems.*

Generation systems reliability is concerned with the reliability evaluation of generating units. The main indices analyzed in this level include: Loss of Load Expectation (LOLE), Loss of Load Probability (LOLP), and Loss of Load Frequency (LOLF). Transmission systems reliability is used to assess the reliability of an existing transmission system or a proposed system. The main indices considered in this level are: failure frequency and failure duration. Distribution systems reliability constitutes the entire power system consisting of generation, transmission and distribution [31].

Reliability of a power system can be assessed using either: the *deterministic* or *probabilistic criteria*. The deterministic criterion is an N-m contingency analysis where a system with 'N' components should be able to serve peak load when it loses 'm' components, sometimes called security analysis. The probabilistic criterion, on the other hand, incorporates the LOLE, the LOLP as well as the LOLF concepts [41].

The power system is stochastic in nature and hence the probabilistic evaluation of the system is preferred for objective analysis. However, deterministic technique is computationally faster and requires less data. Due to the advancement of technology and computational techniques over the years, probabilistic reliability evaluation has become possible and is being practiced widely [36].

2.6.1 Simulation Methods

Power system reliability can be evaluated using two main methods, namely the *classical approach* and *simulation techniques*. The classical approach demands strict mathematical analysis using some devices to solve the problem of straightforward enumeration, such as the variance reduction technique. Simulation techniques, on the other hand, involve selecting system states based on their respective sampling mechanism e.g., sequential or random sampling [20].

Simulation techniques for evaluating the reliability of a power system are subdivided into *Monte Carlo Simulation (MCS)* and *Artificial Intelligence (AI)* based algorithms. MCS deals with formulating models for reliability assessment as well as simulating results for different case studies. AI based algorithm, on the other hand, are used in state selection as an alternative to MCS as well as in pattern classification techniques for state evaluation as an aid to MCS [45].

Monte Carlo Simulation (MCS) Method:

- In MCS, system states are sampled based on their occurrence probability, and both success and failure states sampled contribute to the estimation of reliability indices.
- It has the ability to model complex systems with more details and accuracy than is possible in analytical methods.
- Does not only calculate the expected value of reliability indices, but also their distributions.
- Even though the state is a repeated sample, it still counts for index calculation.
- When MCS is used to deal with highly reliable systems, its efficiency may become low since a large number of system states need to be sampled and evaluated e.g. quite time-consuming.

Artificial Intelligence (AI) Method:

- Unlike MCS, AI based search method is rather problem-dependent, where system states with higher failure probabilities have higher chances to be selected and evaluated.
- The failure probability of system state is used to guide the search.
- Also, unlike MCS, in AI based search method only the failure states are useful in estimating reliability indices.

2.7 Spinning Reserve Resource

Power system *spinning reserves are typical operating power plants that are held below their maximum output level so that they can rapidly increase or decrease their output if needed*.

System operators always maintain a significant spinning reserve resource, which forms a small portion of total power generated. These reserves are used to deal with the rapid and unpredictable changes in electricity demand that occur as people turn appliances on and off, as well as the very large changes in electricity supply that can occur in a fraction of a second if a large power unit suffers an unexpected outage. Instead of backing up each power plant with a second power plant in case the first plant suddenly fails, grid operators maintain pool reserves for the whole system to allow them to respond to a variety of potential unexpected events [34].

The spinning reserve resource for a system containing wind power integration should be larger than the largest on-line generation unit plus an additional contribution for wind generation, calculated based on the work in [14] and described in detail later in section 3.3.2.

System operators use two main types of generation reserves: “spinning reserves,” (regulation reserves plus contingency spinning reserves) which can be activated quickly to respond to abrupt changes in electricity supply and demand, and “non-spinning reserves,” (including supplemental reserves) which are used to respond to slower changes.

2.7.1 Quantifying Spinning Reserve Requirements

There are two basic methods of quantifying required spinning reserve resource as mentioned in section 3.2: deterministic and probabilistic methods. The deterministic method typically sets the quantity of spinning reserve as the capacity of the largest on-line generator or some fraction of the

peak load of the system. This entails use of the conventional Unit Commitment and Economic Dispatch formulation methods. The objective function of the Unit Commitment method considers only the sum of the running and startup costs of all units over all periods of the scheduling horizon in determining the operation cost. The objective function of Economic Dispatch, on the other hand, deals with sharing the power demand among the online generation units while keeping the minimum cost of generation as a constraint [18].

The Unit Commitment objective is to minimize total system cost F, of generating power from N units, over a specific time horizon, T.

$$\text{Minimize } F = \sum_{i=1}^{T} \sum_{i=1}^{N} [C_i\big(P_i(t)\big) + S_i(x_i(t), u_i(t))] \tag{2.12}$$

Where C_i is the fuel cost of unit i, S_i the start-up cost, x_i the number of hours unit i has been ON or OFF, u_i denotes whether power generation of unit i at time t is up or down at time $t + 1$.

To solve the standard Economic Dispatch problem, consider the operation of a power system with N units, each loaded to P_i, which is the power of generator i (in MW), to satisfy a total demand P_D including total transmission loss P_L (in MW).

The Economic Dispatch objective function for each unit can be represented by a quadratic cost function given by equation 2.13.

$$F_i(P_i) = a_i P_i^2 + b_i P_i + c_i \tag{2.13}$$

Where a_i, b_i and c_i are the fuel consumption cost coefficients of unit i, and P_i the value of power to be determined for unit i.

The objective problem minimizes the total cost given by equation 2.14.

$$F_T = \sum_{i=1}^{N} F_i(P_i) \tag{2.14}$$

Where F_T is the total generation cost.

The generation output of each generator should lie between the maximum and minimum limits. The corresponding inequality constraint for each generation unit is given by equation 15.

$$P_{i,min} \leq P_i \leq P_{i,max} \tag{2.15}$$

Where $P_{i,min}$ and $P_{i,max}$ are the minimum and maximum output of generator i, respectively.

It is of importance, though, that this objective function be minimized subject to a number of constraints, the most important being the spinning reserve constraint. Others include constraints pertaining minimum and maximum output levels, minimum up- and down-time constraints, as well as maximum ramp-up and ramp-down constraints [39].

The spinning reserve constraint is expressed as shown in equation 2.16.

$$\sum_{i=1}^{N}(Min(P_{i,max} - P_i, UR_i)) \geq S_R \tag{2.16}$$

Where S_R is the system spinning reserve requirement in MW and UR_i the upward ramp rate limit of the generator.

The probabilistic method, on the other hand, takes load forecast error and forced outage rates of generators into consideration by satisfying some reliability indices, such as loss of load probability and/or expected energy not served.

Maintaining a good spinning reserve, however, comes at a cost, which needs to be kept at its minimum so as to reduce the costs of operation and optimize power generation.

The problem of quantifying spinning reserve faces additional challenges due to the rapid growth of wind power penetration. This is due to the reason that the output of a wind turbine generator varies at all times since wind speeds are predicted with only limited accuracies. Hence the need for taking into account the uncertainty of wind power output when quantifying the spinning reserve requirements by committing more reserve from the conventional generation units. This requires use of stochastic optimization techniques which is most suitable for solving Unit Commitment problems in power systems with high wind power generation. In this case, the spinning reserve resource is determined as the size of the largest online generation unit plus a fraction of the predicted wind power [38].

Variability and uncertainty are not unique to wind power generation. Future loads cannot be perfectly predicted, loads and generator outputs can vary substantially in different time frames,

and large power system equipment can fail at any given time without notice. Power system operators secure different amounts and types of spinning reserves to compensate for these characteristics in order to serve load reliably and maintain the system frequency. It is this variability and uncertainty of power systems that calls the need for adequate spinning reserves to be maintained by the system operators [42].

More spinning reserves are needed to take care of this uncertainty of wind power since a different supply-demand profile is needed than what was scheduled. Figure 3.6 shows an example of variability and uncertainty for wind generation output.

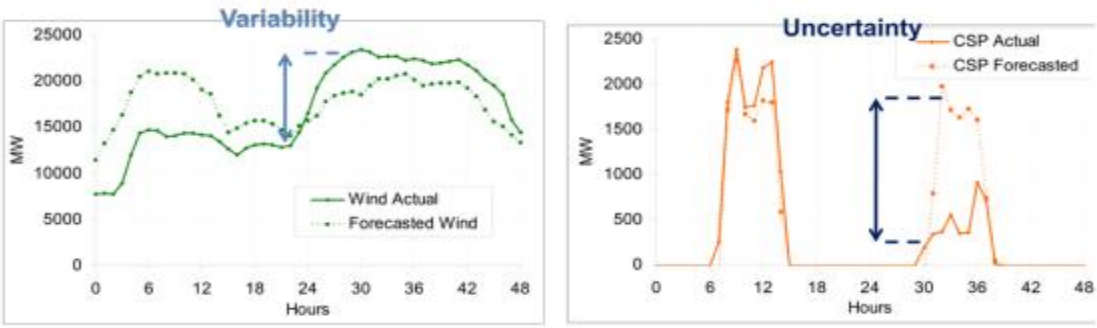

Figure 3.10: Variability and uncertainty of wind power

2.7.2 Large-Scale Wind Integration Studies

In recent years, a number of different entities have initiated or completed studies specifically aimed at analyzing the impacts and costs of operating power systems with large penetrations of wind power generation. The studies usually make assumptions about the nature of the power system at some time in the future. This may include additional load, additional conventional generation, additional transmission, and particular market and operational structures. The studies then use future wind power outputs and analyze the power system using simulations and statistical techniques [8]. The objectives of these studies vary, but most focus on both the operating costs and operating impacts.

Ireland: All Island Grid Study (2010)

The "All Island Grid Study" in Ireland was published in 2008 and examined the Irish system's ability to integrate various penetrations of wind generation [12]. Six plant portfolios were examined to meet the load forecasted for 2020. Portfolio 1 contained 2GW of wind; 2, 3, and 4 contained 4GW; portfolio 5 contained 6GW; and portfolio 6 contained 8GW of wind generation. This is in the context of a projected peak load of 9,618MW and a load factor of 63.9%. The study involved hourly scheduling of the system with the WILMAR system planning tool [11].

The study incorporated a refined implementation for reserve provision with only two categories specified in the model: spinning and replacement reserve. The definition of a unit capable of meeting the replacement reserve standard was an off-line unit with a start-up time of less than 60 minutes and online units whose capacity was not allocated to the spinning reserve requirement. This is a highly simplified model given the existing structure of reserve provision in the Irish system. The requirements for spinning and replacement reserve were based on a mixture of existing and proven requirements and newer techniques for the provision of reserve for wind generators.

Ireland is an island system with one 500MW interconnector in operation and a 500MW interconnector under construction, both to Great Britain. System modeling for the year 2020 assumed that 100MW of spinning reserve can be obtained through interconnection. Another 50MW of reserve is assumed to be provided from interruptible contract loads. Of the remainder, a constraint of a maximum of 50% of reserve demand can be provided by pumped storage. Wind generators are allowed to provide spinning reserve when curtailed.

The demand for spinning reserve is illustrated in Fig. 3.11 on a weekly averaged basis. Spinning reserve is required more frequently as the amount of wind increases in the portfolio, significantly so in portfolio 6. The scheduled outage of the largest unit on the system (i.e., 480MW combined cycle gas turbine) is seen to reduce the spinning reserve requirement significantly during weeks 31 to 34. While the variable generators require additional spinning reserve, the largest contributing factor remains the loss of the largest conventional unit [43].

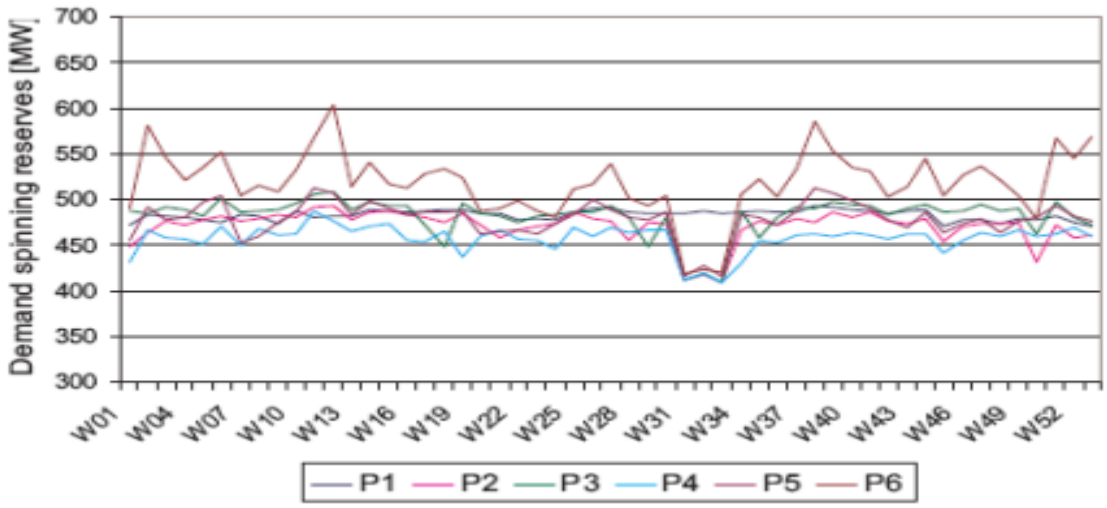

Figure 3.11: Demand for spinning reserve for different generation portfolios

Academic Research: Doherty 2012

The analysis of [44] evaluated the need for system reserves (Contingency Reserve and Following Reserve) due to wind and load forecast errors either by themselves or in addition to contingency (loss of supply) events. A model evaluated the reliability of a system based on the full outage probability (i.e. the probability of an outage occurring in any hour, which is different than forced outage rate, the probability that the unit is out during the hour), as well as wind and load forecast errors. Its risk level is determined by the load shedding incidents (LSI) tolerated per year. For example, if one LSI occurred during the year and lasted 24 hours, this would equate to an LSI of one and a loss of load expectation of 24 hours. The load forecast errors were combined with the wind forecast errors as independent and uncorrelated normally distributed Gaussian values.

The probability of load shedding during any hour would be equal to the probability of load shedding during normal instances when the system is holding its full reserve requirement, plus the probability of load shedding following a time period Hr after a disturbance event, when the system is using reserve to respond to the initial disturbance, and is therefore more vulnerable to load shedding because of the lesser reserve amount. A load shedding incident here is defined as any incident in which the supply deficiency is more than the quantity of reserve [48]. Both full and partial outages of conventional units are discussed. The event of three conventional unit outages

within the reserve replacement time period is ignored due to its very small probability. Therefore, the probability of load shedding occurring is as shown in equation 2.17.

$$PLS_h = PLSNO_h + \frac{1}{2}(Hr) + \left[FOP_{1,h}\ \ FOP_{2,h} \dots\ FOP_{G,h}\right] \times \begin{bmatrix} PLSFO_{1,h} - PLSNO_h \\ PLSFO_{2,h} - PLSNO_h \\ \vdots \\ PLSFO_{G,h} - PLSNO_h \end{bmatrix} + \frac{1}{2}(Hr) + \left[POP_{1,h}\ \ POP_{2,h} \dots\ POP_{G,h}\right] \times \begin{bmatrix} PLSPO_{1,h} - PLSNO_h \\ PLSPO_{2,h} - PLSNO_h \\ \vdots \\ PLSPO_{G,h} - PLSNO_h \end{bmatrix} \quad (2.17)$$

Where PLS is the probability of load shedding, $PLSNO$ is the probability of load shedding during the normal case (no prior generator trip), Hr is the reserve replacement time in hour, FOP is the full outage probability, $PLSFO$ is the probability of load shedding following a full outage of a generator, POP is the partial outage probability, and $PLSPO$ is the probability of load shedding following a partial outage of a generator. G is the set of generators. The ½ coefficient of Hr represents the integral of the linear response of the replacing reserve (Tertiary Reserve) that replaces the reserve used for the generator outage.

The $PLSNO$, $PLSFO$, and $PLSPO$ are determined by calculating the system reserve, or remaining reserve, due to full and partial outages, being below the positive net demand forecast error (i.e., the actual net demand was higher than the forecast net demand by an amount greater than the reserve or remaining reserve). By setting an LSI target, the amount of system reserve can be quantified by analysis of these steps. A case study using this methodology was performed for the Ireland electricity system with an installed capacity of 7500MW and wind penetrations up to 2000MW. Full outage probabilities of conventional units in the system ranged from 0.003 to 0.006, the standard deviation of load forecast errors was taken to be 75MW, and standard deviation of wind forecast errors was taken to be 15% of the installed capacity for a 3-hour forecast horizon. With an LSI of 3 incidents per year, the reserve was found to be about 625MW compared to 475MW without wind [9]

CHAPTER THREE

3.0 METHODOLOGY

3.1 Simulation Algorithm

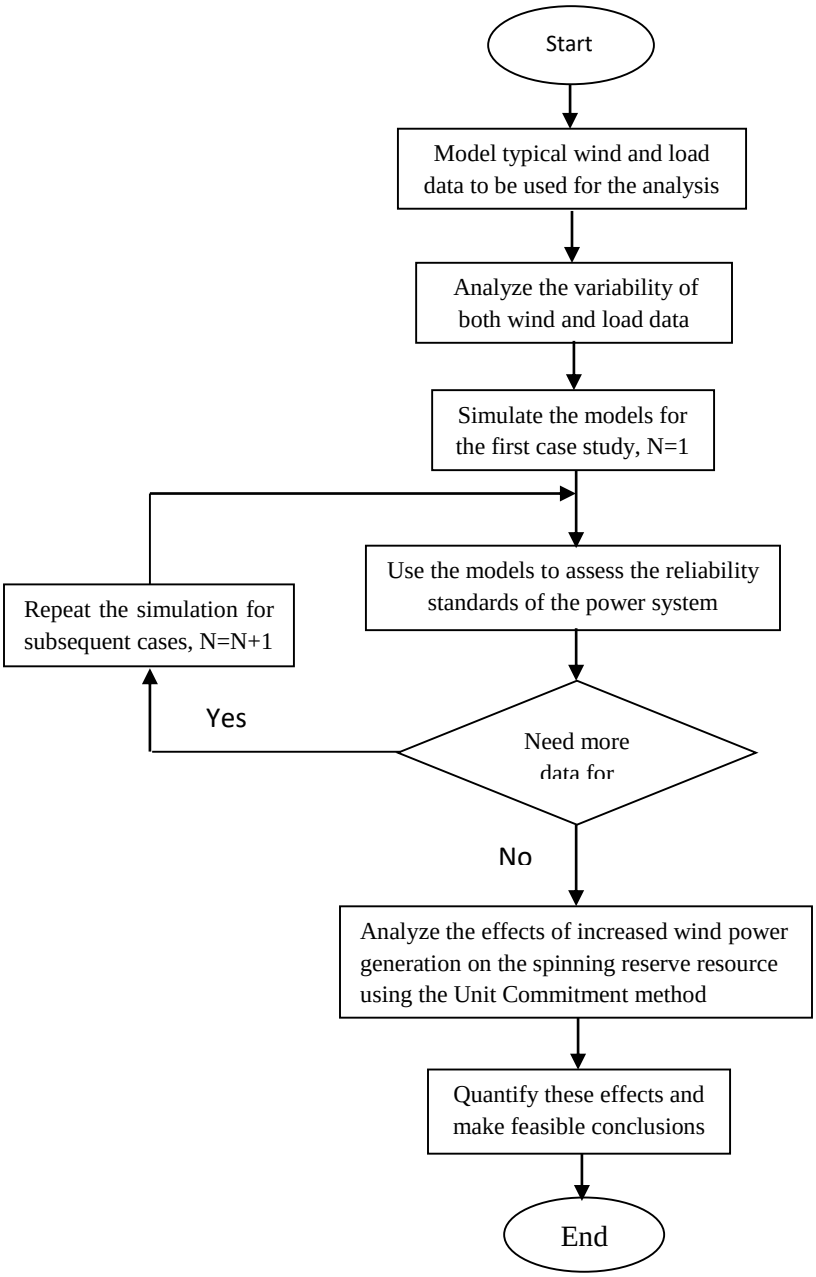

Figure 3.1: Flow chart for the simulation algorithm

Figure 3.1 shows the generic flow of the entire simulation algorithm within which the results of this study are obtained. It clearly shows the logical step by step process of how the model operates. In attaining the main objective of this study, a wind farm model was developed using MATLAB/Simulink Software Simulation tools. Stochastic programming through Monte Carlo simulations was used in the sizing and quantifying operating reserve requirement of the power system subject to the required reliability levels. Finally the effects of increased wind power generation on the power system spinning reserve resource were assessed.

3.2 Modeling the Variability of Wind and the Load

In this study, a typical wind farm model was designed and implemented using MATLAB/Simulink software. The wind farm model was based on DFIG type. In addition a model representing variations in load demand was also be created using MATLAB. Statistical analysis on the wind power output data and load data was carried out to examine the nature of variability and uncertainty. This was critical in ensuring the data is expanded to some distribution as opposed to single values which is used in reliability evaluation. Plots of the variable wind speed and the load in time series were then created to gain an insight into wind and load data features before proceeding with the simulation. Wind power data for the model were then computed from the variable wind speed data using equation 3.1. This data was then combined with the variable load data to determine the reliability of the model.

$$P_{wind} = P_{rated} \cdot \frac{(V_{wind}^2 - V_{in}^2)}{(V_{rated}^2 - V_{in}^2)} \tag{3.1}$$

Table 3-1 below shows the daily electricity demand data and corresponding wind speed data used for the model in this study.

HOUR	LOAD (MW)	WIND SPEED (m/s)		HOUR	LOAD (MW)	WIND SPEED (m/s)
1	155	15.6		13	254	6.5
2	142	13.5		14	283	13.4
3	151	13.1		15	298	11.9
4	155	13.9		16	310	8.9
5	188	15.1		17	305	5.1
6	229	15.2		18	293	5.3
7	268	17.2		19	320	1.7
8	294	12.7		20	353	3.3
9	268	17.0		21	361	5.7
10	258	11.7		22	334	8.3
11	247	6.6		23	286	6.4
12	254	5.1		24	198	9.0

Table 4-1: 24-hours wind speed and load data for the model

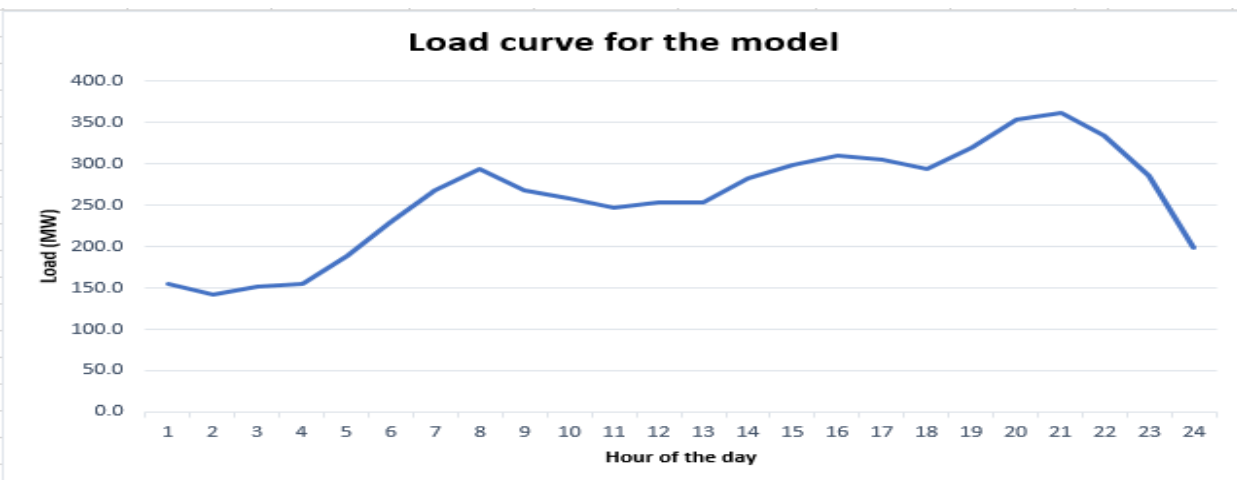

Figure 3.2: Load curve for the model used in the study

Figure 3.2 shows the load curve for the model used in the study. It shows that the hourly load varies throughout the day, with the highest demand being during the peak hours. These peak hours normally occur in the morning and in the evening.

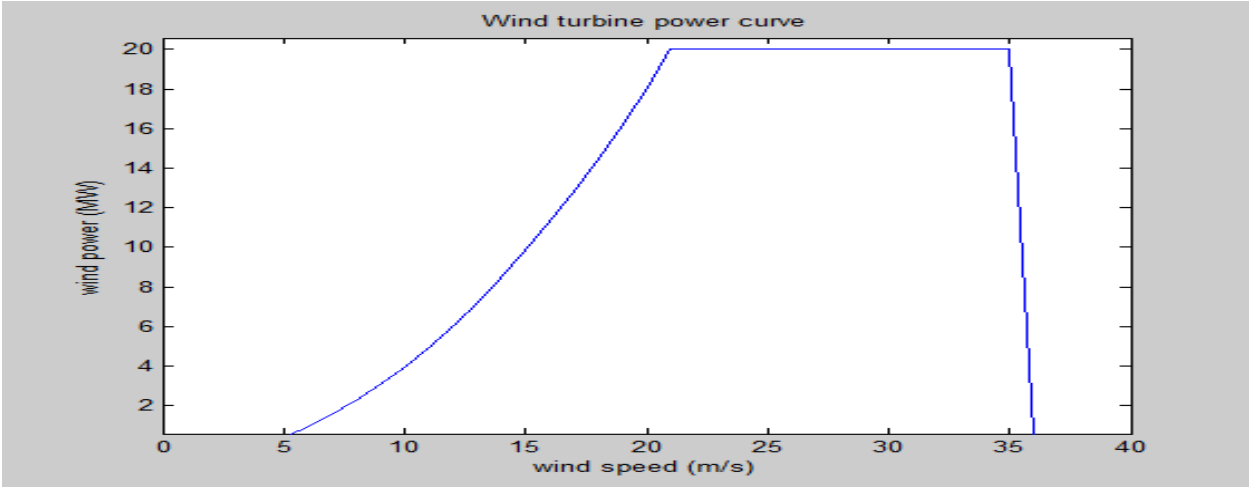

Figure 3.3: Wind power curve for model with 20MW of wind power

Figure 3.3 illustrates the wind power input-output characteristics of the modeled wind turbine with a power rating of 20MW. Wind power is only produced when the wind speed exceeds the cut-in wind speed of the turbine and increases exponentially until the rated wind speed is attained. The output power of the turbine remains constant at the rated value for wind speeds exceeding the rated wind speed. However, no power is generated by the turbine for wind speeds above the cut-out wind speed as the turbine is designed to automatically turn itself off to prevent its blades from potential damage by high wind speeds.

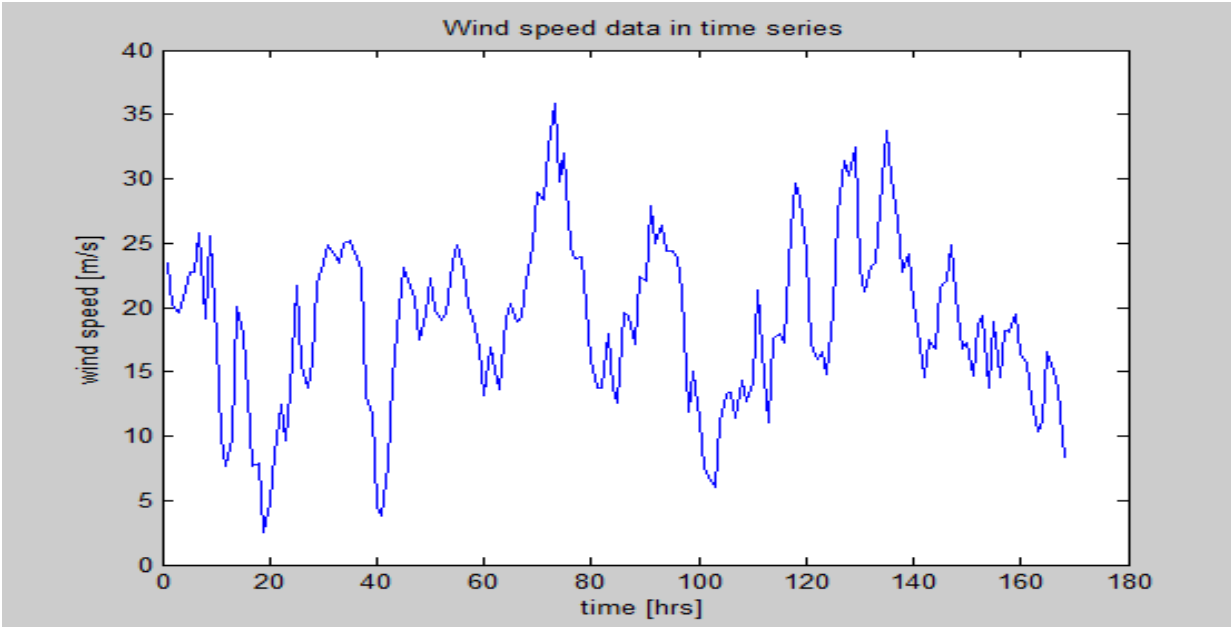

Figure 3.4: Variability of wind speed for a week's data for the model

Figure 3.4 shows the variability of wind speed in time series for a week's data for the model used in the study. Wind speeds are predominantly random and fluctuate at all scales of time; seconds, minutes, hours, days, weeks, months, years and seasons. The speed of wind does not at any single moment in time follow any particular pattern. This implies that the corresponding wind power generated from such wind speeds is equally variable and highly unreliable, since wind power output is directly proportional to wind speed as explained in section 2.4.3. In fact, the variability in the wind power generation is approximately equal to the cube of the variability of the wind speed since wind power is directly proportional to the cube of the wind speed i.e. $P_{wind} \propto V_{\infty}^{3}$. This implies that a small variation in the wind speed causes the wind power to vary by a larger margin.

Power system operators, therefore, need to ensure that for increased wind power generation to be integrated into the system, more spinning reserves are required so as to cater for the uncertainty of wind power generation. The spinning reserve resource requirements for such a system should be large enough to cater for the event of loss of the largest online generation unit, plus a portion of the predicted wind power generation.

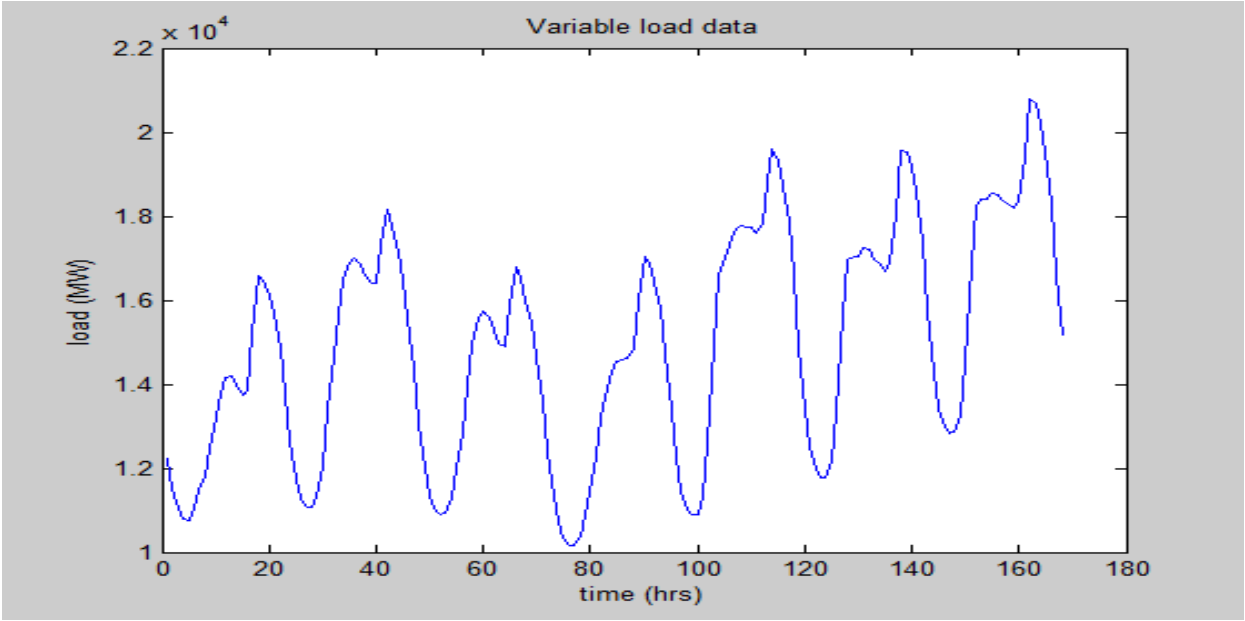

Figure 3.5: Variability of load for a week's data for the model

Figure 3.5 above, on the other hand, reveals the variability of the load in time series for a week's data for the model. The figure shows that the load, just like wind speed and power, varies at any given moment in time. However, unlike wind variations, the load varies in a consistent pattern every day. The load is generally highest in the evening because that's when peak demand for power occurs. This trend happens every day of the week, even though power demand is usually higher during weekdays compared to weekends

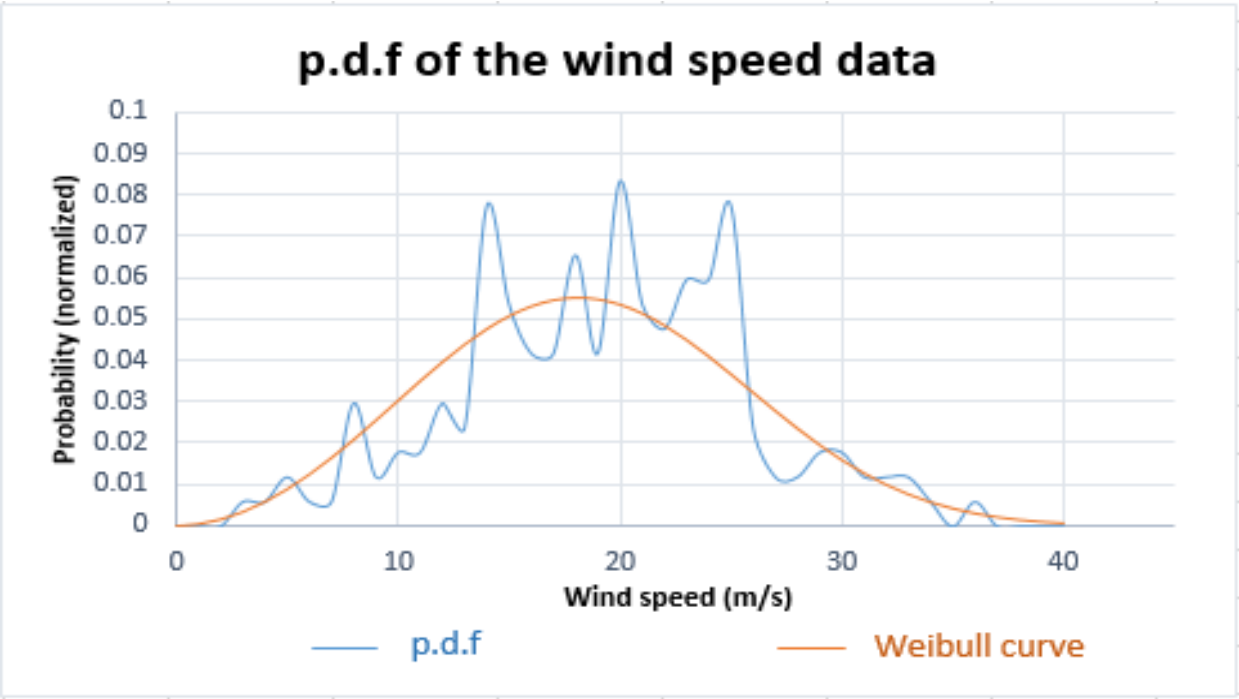

Figure 3.6: Probability density function of wind speed data for the model

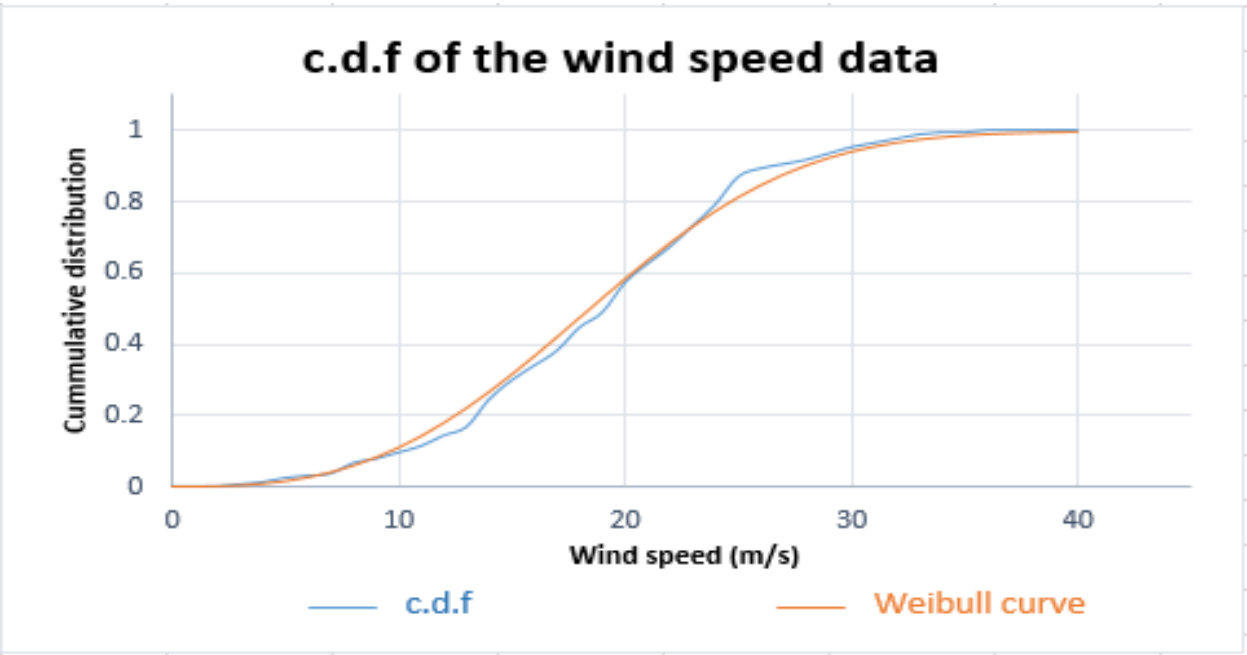

Figure 3.7: Cumulative distribution function of wind speed data for the model

Figures 3.6 and 3.7 show the probability density function (p.d.f) and the cumulative distribution function (c.d.f), respectively, for the wind speed data used in the study, both plotted in Ms. Excel.

The p.d.f curve indicates the probability of occurrence of different wind speed values in the data. The c.d.f curve, on the other hand, shows the cumulative probability of occurrence of different wind speed values below a given point along the function curve.

3.3 Assessing the Power System Reliability

In order to determine the impact of wind variability on the spinning reserve and consequently determine the reliability of the model, changes in wind power output were matched with corresponding changes in the other conventional generation units used in the model.

Data relating to wind power generation and the load were used to determine the variations in both wind and the load. The difference between wind and load generations for consecutive hours was used to determine the hourly wind power and load variations as expressed in equations 3.2 and 3.3, respectively. These variation results were stored in excel format for further analysis.

$$\Delta P = P(h+1) - P(h) \tag{3.2}$$

$$\Delta L = L(h+1) - L(h) \tag{3.3}$$

Where L represents the load, P the wind power generated (both in MW), h the current hour and $h+1$ the following hour.

The net hourly variations were then determined by subtracting the wind variations from the load variations as shown in equation 3.4. These variation results were stored in Ms. Excel for further analysis.

$$\Delta NL = NL(h+1) - NL(h) = \Delta L - \Delta P \tag{3.4}$$

Where NL denotes the net load in MW.

The net load variations for different scenarios were then used to assess the spinning reserve requirements for the three different scenarios used in the model: a system containing one of 20MW, 40MW or 60MW of wind power generation capacity. The spinning reserve requirements at the different wind power generation levels were then assessed using the simulation data stored in Ms. Excel. The findings have been discussed in chapter 4.

3.4 Determining Spinning Reserve Requirements

Spinning reserve resource requirements and the cost of reserve were determined and quantified by performing Monte Carlo Simulations on the wind and load data for the model.

Stochastic programming techniques and the Unit Commitment formulation method explained in section 2.6.1 were used to determine the spinning reserve required for all three scenarios used. On the basis of an initial UC solution, the system generation margins for a particular hour was determined. The total system imbalances was composed of 2 main components namely forecast error over the settlement period which is the difference between the forecast and the average output over the same period and the short term fluctuation inside the settlement period. The cause of power imbalance between load and supply was established within a suitable settlement period. The generation margin and imbalance driver were used in quantifying operating reserve requirement dynamically in real time at a specific Confidence Level using a probabilistic method. Operating reserves was allocated to compensate the possible imbalance that may occur between generation and consumption on real-time due to wind integration. The results of the simulations were also used to determine the cost of the spinning reserve resource for the three scenarios, both with and without considering the reserve constraint.

For the wind turbine model, the values used for the cut-in, rated and cut-out wind speeds were 4 m/s, 21 m/s and 35 m/s, respectively. A forecast error of $\pm 20\%$ was considered in the computations to represent the error of forecasting wind power generation. The findings have also been discussed in chapter 4.

3.5 Reserve Allocation Algorithm

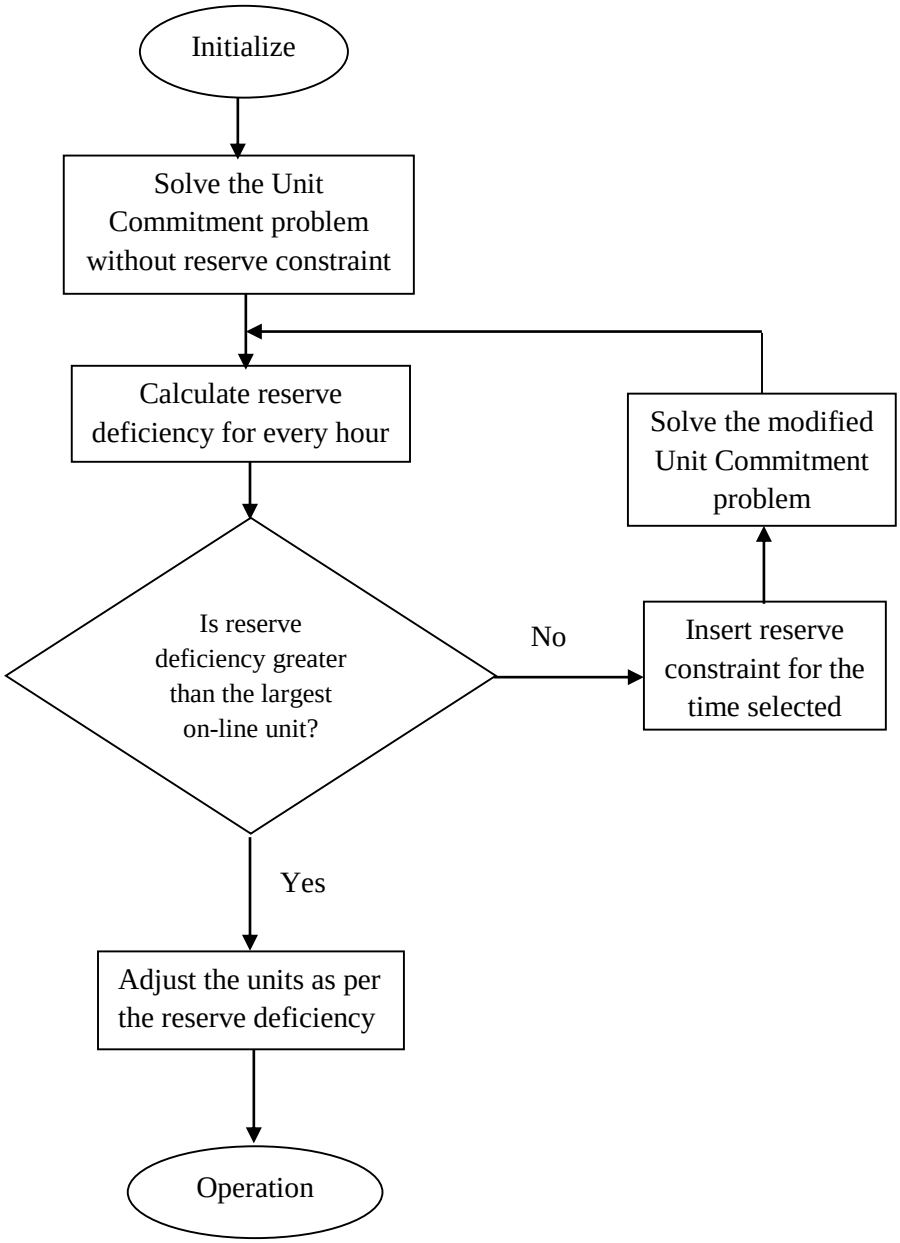

Figure 3.8: Flow chart for reserve allocation algorithm

Figure 3.8 above demonstrates specifically the logical operation of the reserve allocation algorithm used in the model. It incorporates a modified unit commitment approach and economic dispatch in determining the spinning reserve required with and without the reserve constraint.

Lastly an analysis was carried out to determine the impact of increased wind penetration on power system spinning reserve requirement and feasible conclusions made. An optimization process was

carried out to ensure the size of operating reserve proposed balances between economics and reliability requirements of the power system.

CHAPTER FOUR

4.0 RESULTS AND DISCUSSION

4.1 IEEE 30 bus system

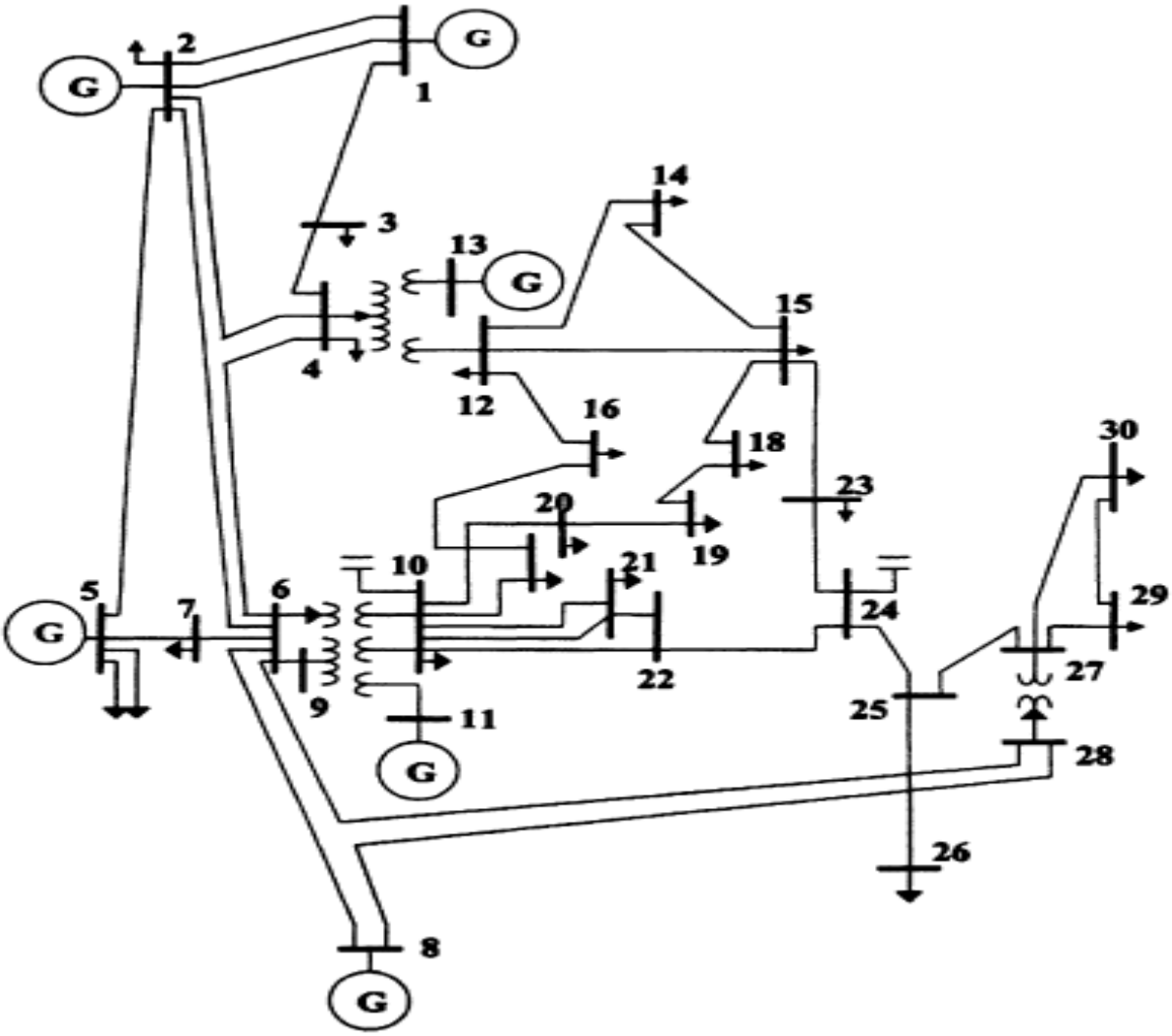

Figure 4.1: One line diagram- IEEE 30 bus system

Table 4-1 below shows the generator characteristics for the IEEE 30 bus test system used for the model. The data is critical in calculating the operational cost function of individual generators which is important for economic dispatch decision.

UNIT	CAPACITY (MW)	MIN POWER (MW)	MAX POWER (MW)	COEFFICIENTS		
				a	b	c
P1	80.0	20.0	80.0	0.00375	2.000	0
P2	80.0	20.0	80.0	0.0175	1.750	0
P3	40.0	10.0	40.0	0.0625	1.000	0
P4	50.0	12.5	50.0	0.00834	3.250	0
P5	30.0	7.5	30.0	0.025	3.000	0
P6	155.0	38.75	155.0	0.025	3.000	0

Table 4-1: Generator active power cost coefficients for 30 bus IEEE test system used for the model

Table 4-2 shows the IEEE 30 bus load bus data.

Bus no.	Load		Voltage magnitude limit (pu)	
	P_d(MW)	Q_d(MVAR)	V_{max}	V_{min}
3	2.4	1.2	1.05	0.95
4	7.6	1.6	1.05	0.95
5	0	0	1.05	0.95
6	0	0	1.05	0.95
7	22.8	10.9	1.05	0.95
8	30	30	1.05	0.95
9	0	0	1.05	0.95
10	5.8	2	1.05	0.95
11	0	0	1.05	0.95
12	11.2	7.5	1.05	0.95
14	6.2	1.6	1.05	0.95
15	8.2	2.5	1.05	0.95
16	3.5	1.8	1.05	0.95
17	9	5.8	1.05	0.95
18	3.2	0.9	1.05	0.95
19	9.5	3.4	1.05	0.95
20	2.2	0.7	1.05	0.95
21	17.5	11.2	1.05	0.95
24	8.7	6.7	1.05	0.95
25	0	0	1.05	0.95
26	3.5	2.3	1.05	0.95
28	0	0	1.05	0.95
29	2.4	0.9	1.05	0.95
30	10.6	1.9	1.05	0.95

4.2 Spinning Reserve Available

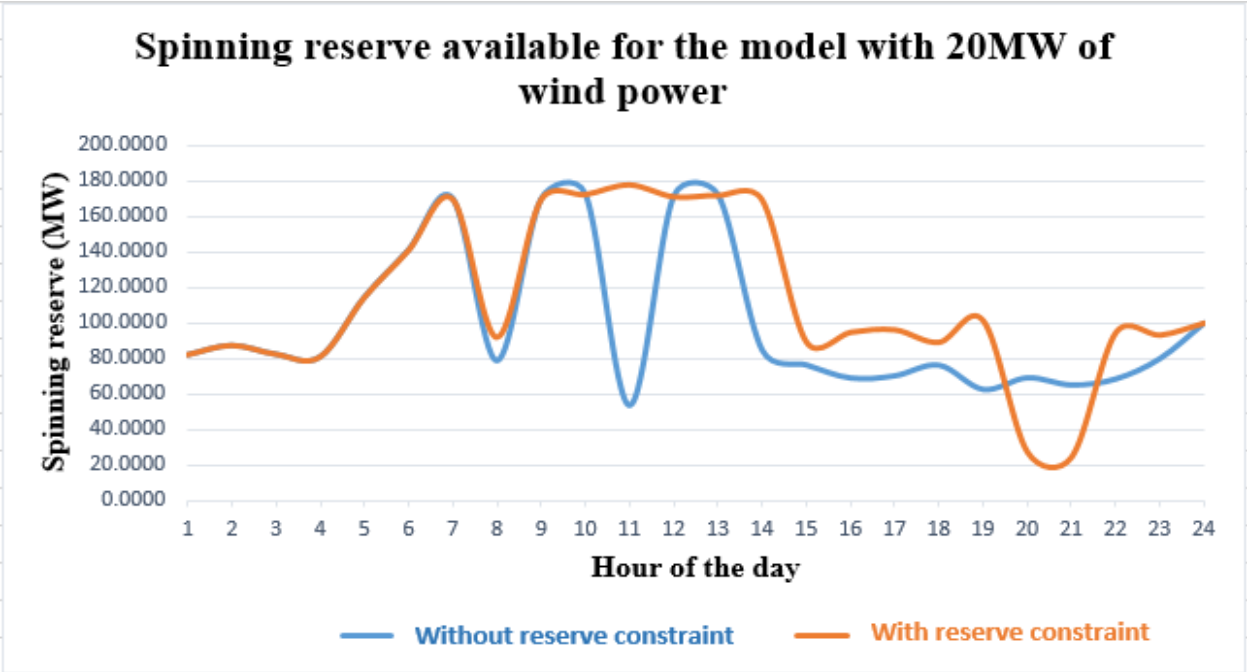

Figure 4.2: Actual spinning reserve for the model with 20MW of wind power

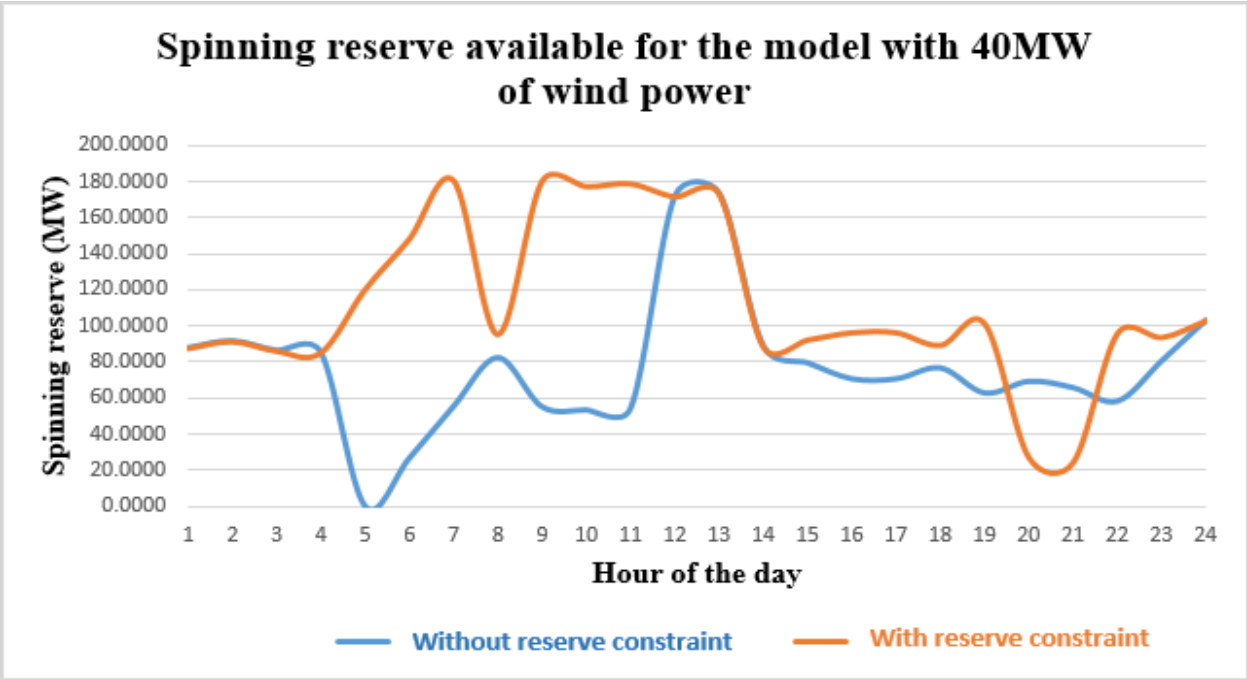

Figure 4.3: Actual spinning reserve for the model with 40MW of wind power

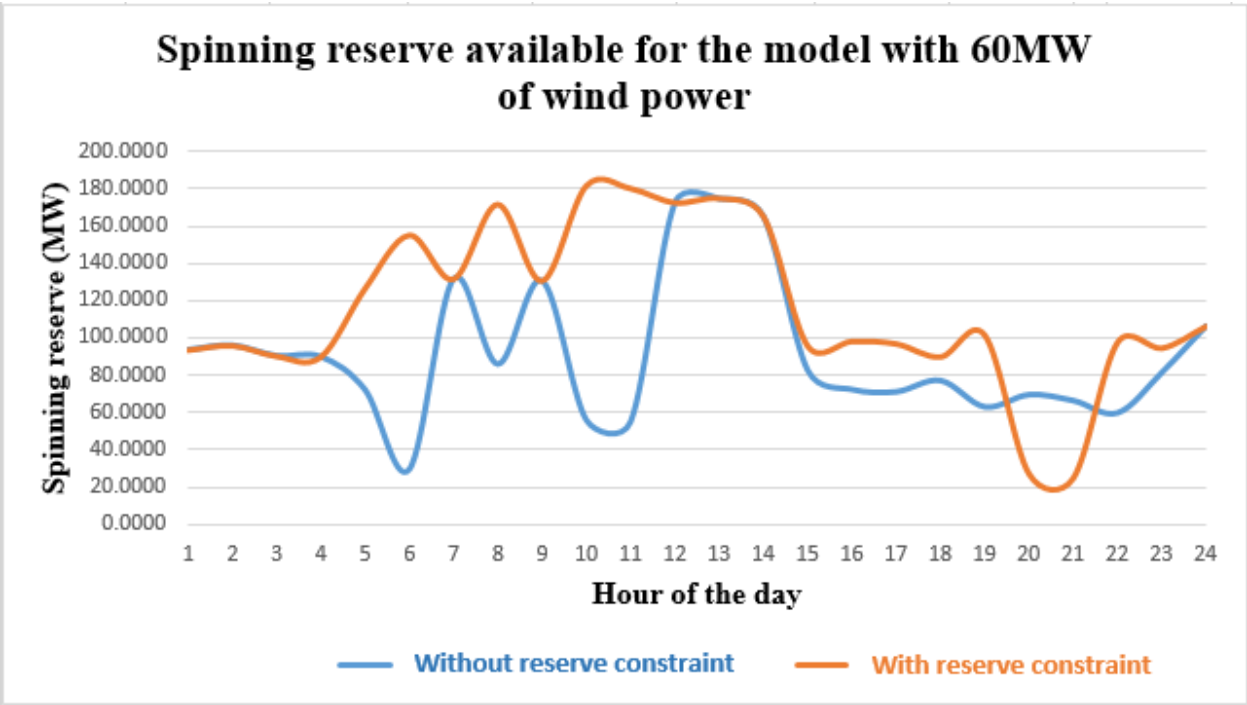

Figure 4.4: Actual spinning reserve for the model with 60MW of wind power

Figures 4.2 to 4.4 show different behaviors and trends relating an increase in wind power generation with the spinning reserve resource requirements over a 24-hours period for the three scenarios used in the model.

These three plots indicate that the actual spinning reserve in the model is larger when the reserve constraint is considered than when not. This is because the reserve constraint requires that more generation units be committed so as to reduce their individual output levels and meet the spinning reserve requirements, while at the same time optimizing the operation costs.

Data obtained from the simulation and stored in Ms. Excel, as well as the plots show that of the three scenarios, the system with 60MW of wind power requires the largest spinning reserve, followed by 40MW and lastly 20MW wind power. Consequently, the highest costs of the spinning reserve resource are incurred with the model containing 60MW, followed by 40MW and lastly 20MW of wind power.

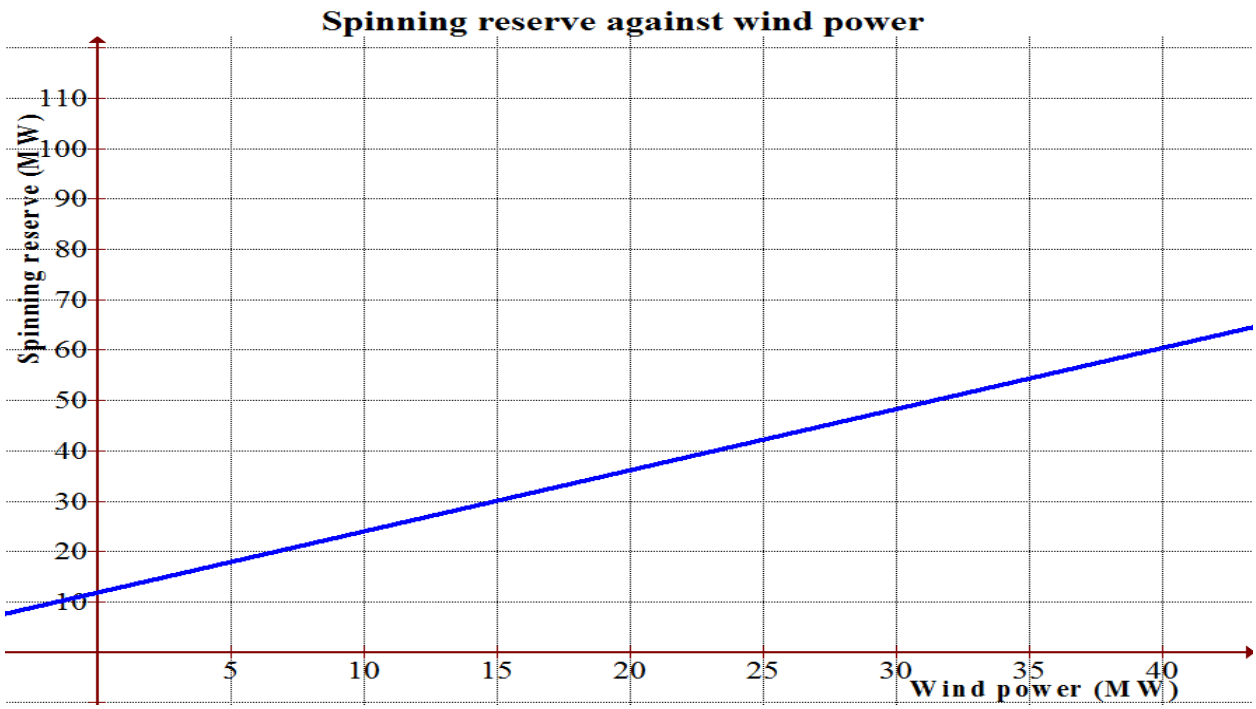

Figure 4.5: Spinning reserve required against wind power for the model

Figure 4.4 shows that the size of the spinning reserve is directly proportional to the wind speed, and consequently to the wind power generation. Therefore, a larger pool of spinning reserve resource is required when more wind power is generated. This larger reserve enables the power system to handle the event of loss of the largest on-line generation unit plus a proportion of the forecasted wind power, considering the variability, uncertainty and unreliability of wind.

Power system operators cannot accurately predict future wind speed. Therefore, they need to formulate a method in which they can comfortably facilitate the integration of increased wind power into the utility's grid. This is usually done by considering a given percentage of the wind power that represents the error of forecasted wind speed and power data in determining the size of the spinning resource pool to set aside. This way, they can maintain an adequate spinning reserve that can handle the power system within stable power limits.

4.3 Spinning Reserve Required

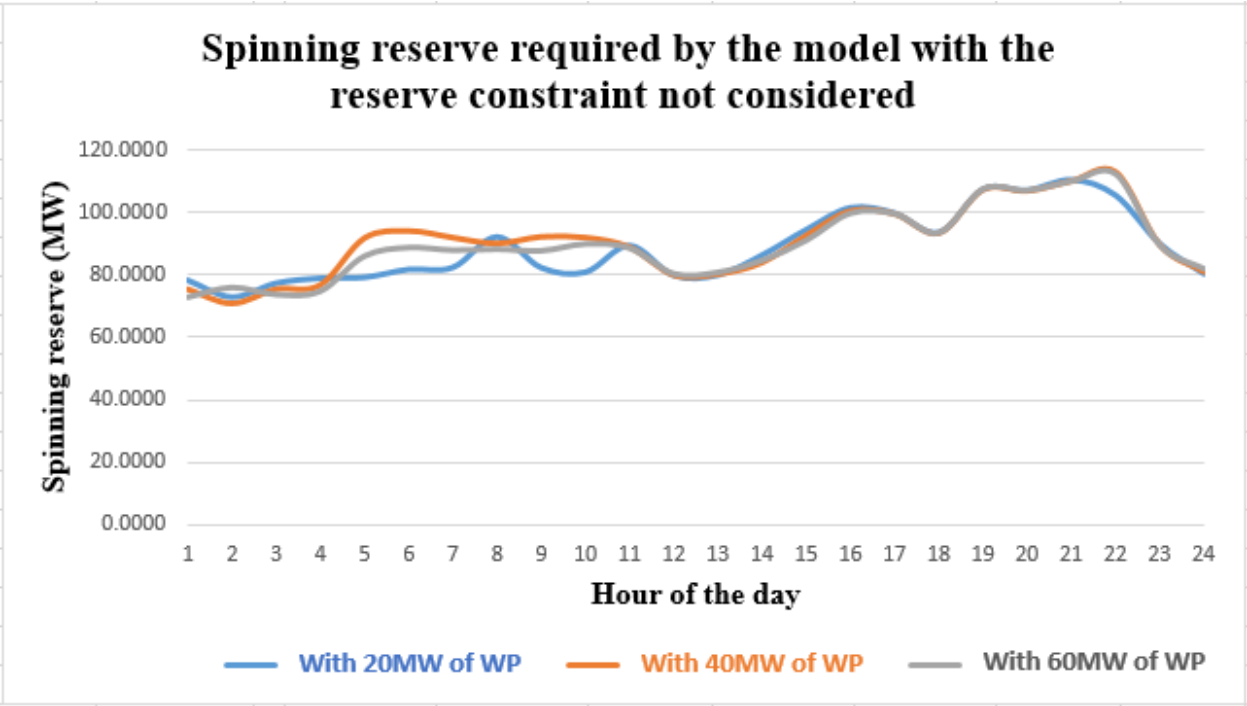

Figure 4.6: Spinning reserve required by the model without reserve constraint

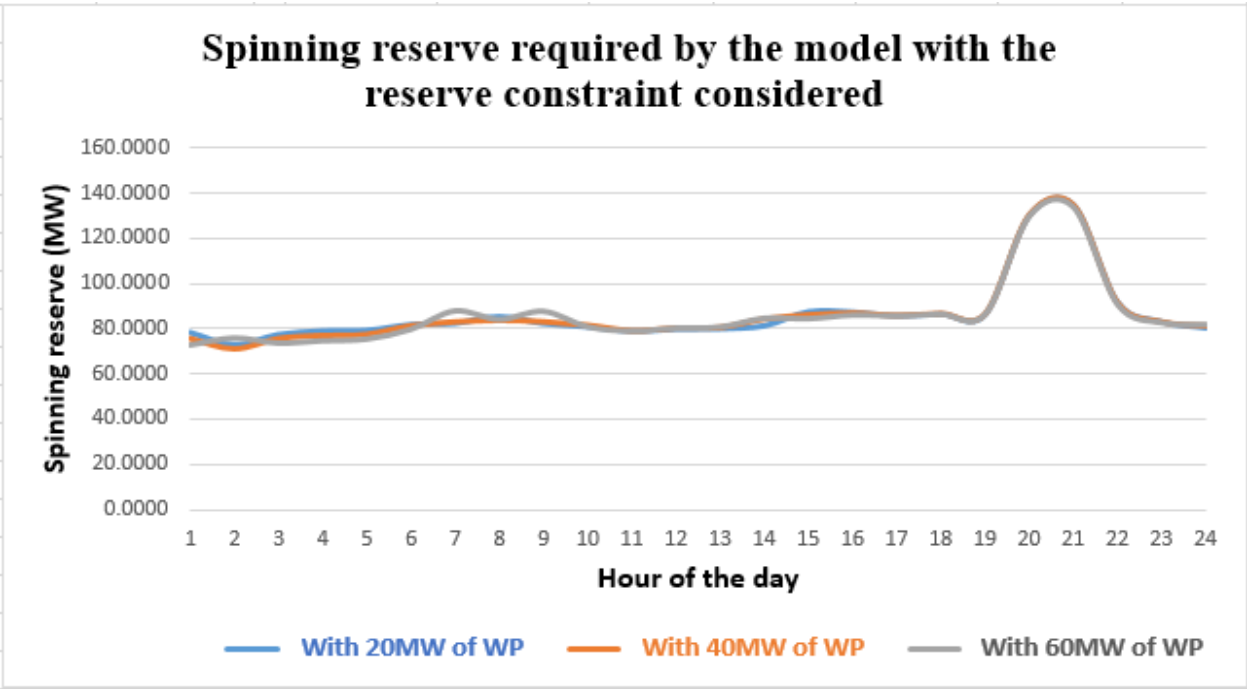

Figure 4.7: Spinning reserve required by the model with reserve constraint

Figures 4.6 and 4.7 show that the spinning reserve resource required by the system is smaller when the reserve constraint is considered than when not. This is because of the fact that more units are committed and their individual outputs are reduced as a result. What this implies is that a larger pool of spinning resource is then availed as a result.

Now, the spinning reserve required is computed as the size of the largest on-line generation unit plus a fraction of the predicted wind power, and it is in most cases larger when the reserve constraint is not considered than when taken into consideration. This explains why less spinning reserve is required when the reserve constraint is considered than when not.

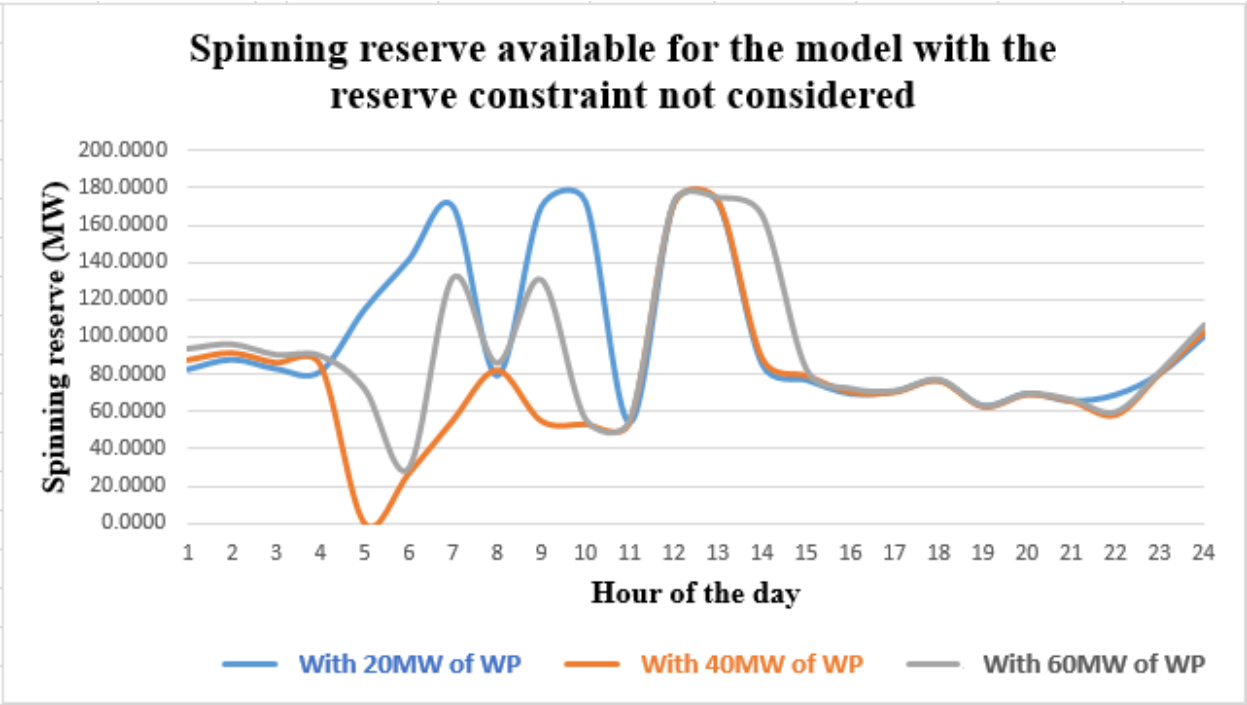

Figure 4.8: Actual spinning reserve for the model without reserve constraint

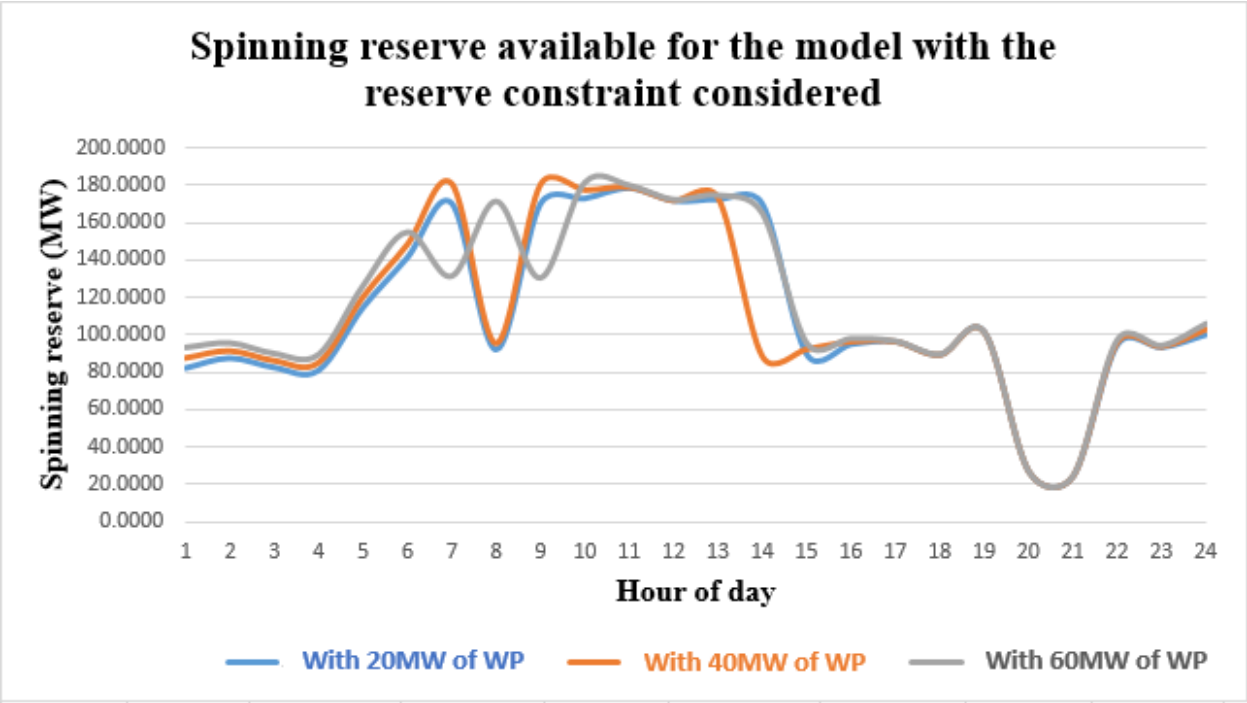

Figure 4.9: Actual spinning reserve for the model with reserve constraint

Figures 4.8 and 4.9 indicate that the actual spinning reserve in a power system is in most cases larger when the reserve constraint is considered that when not. This, again, is due to the fact that more generation units are committed when the reserve constraint is considered than when not. When the reserve constraint is not taken into consideration, less units are committed with the only objective being to optimize the costs of operation. This implies that the few units committed will operate at levels close to their rated capacity and this will reduce the spinning reserve resource pool.

Conversely, with the spinning constraint taken into consideration, the increased number of generation units ensures a larger pool of spinning reserve is available at a given duration of time. This causes the actual spinning reserve resource to be more when the reserve constraint is considered than when not.

4.4 Economics of Spinning Reserve Provision

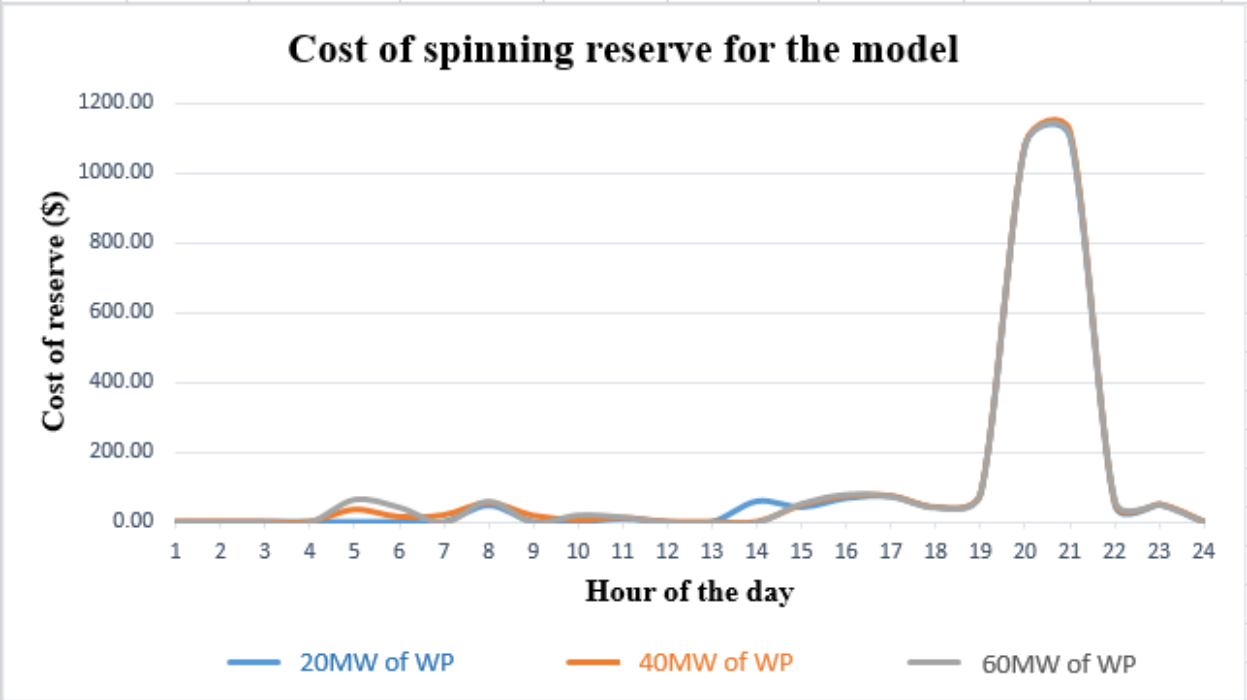

Figure 4.10: Cost of spinning reserve resource

Figure 4.10, as well as the obtained simulation results, show that the cost of the spinning reserve required for efficient and effective operation of a power system increases with increase in wind speeds, hence with wind power integrated into the system. This is because more spinning reserve resource is required as the wind speed and wind power increases to take care of the uncertainties related to wind data. The cost of the reserve also increased with the load. This is because a large load requires generation units to operate at higher than normal level, and hence the spinning reserve of the system reduces as a result. Extra efforts have to be put in place to ensure the spinning reserve is increased to a level that can comfortably handle the system. This reserve comes at an extra cost. From the plot, the unexpected steady rise in the cost of the spinning reserve is as a result of the high demand for power at that hour, which stretches the model to a reasonable level because of the reserve inadequacy.

The simulation results also indicate that the cost of the spinning reserve is directly proportional to the size of the spinning reserve resource itself. This explains why more costs are incurred every time there is an increase in the spinning reserve resource.

CHAPTER FIVE

CONCLUSION AND RECOMMENDATION

5.1 Introduction

This chapter contained a summary of the findings, recommendations, conclusions and areas for further studies that the study identified. The summary of the findings was done in line with the study objectives. The conclusions were also presented per objective.

5.2 Contributions

The study concluded that he general wind speed and wind power pattern is predominantly random, variable and uncertain. However, the load pattern also varies at all times but does so in a more consistent manner compared to the wind speed pattern, both during peak and off-peak hours, all days of the week. High wind speed variability translates to proportionately high wind power variability and hence high unreliability of the wind turbines. The converse is also true. Wind power variability increases as the size of wind power generation increases.

Increase in wind power generation requires power system operators to maintain a larger pool of spinning reserve resource. The increased spinning reserve enables system operators to comfortably deal with uncertainties associated with wind power generation so as not to affect the operation of the whole system. Therefore, as more of wind power is integrated into the grid, a larger spinning reserve resource is necessary since it has to take care of the event of loss of the largest online generation unit as well as a fraction of the predicted wind power. This is because of the unreliability of wind power generation. This fraction of the predicted wind power takes care of the errors in wind speed forecasting.

Higher costs of the spinning reserve are incurred when the reserve constraint is taken into consideration than when not. This is because the reserve constraint holds that at no time should the spinning reserve be lower than the largest committed generator plus a fraction of the predicted wind power, and consequently a larger spinning reserve resource is required. This extra spinning reserve comes at an extra cost and this translates to higher operation costs.

The Unit Commitment formulation method plays an important role in determining how the spinning reserve resource varies as more wind power is integrated into the power system. This gives more details on how variations in wind speed and wind power generation affect the output of the other conventional generation units, the spinning reserve, and the overall operation costs of the power system.

5.3 Recommendation

In penning off, the following recommendations with regard to this research work were made:

- Chronological data illustrating the variability of wind and the load for a relatively long period of time would be more appropriate for this type of research. Such data would provide a better predictive pattern and feedback value which can be used for decision making processes. Such data would reveal more realistic variations in various parameters relating to both wind and load data. Hence, more feasible conclusions would be made.
- Generated wind speed data using the Weibull distribution does not properly reflect proper correlation in the time domain. This significantly affects the Unit Commitment results. Auto-Regressive Moving Average (ARMA) models would be more appropriate as they take into consideration the characteristic that wind speed at any time tends to be close to the immediate previous speed, implying there would be no sudden changes in wind speed.
- Incorporating more constraints in problem formulation such as the transmission capacity constraints would make the methodology more practical.

References

[1] Kenya Power, 23 September 2017. [Online]. Available: http://kplc.co.ke/category/view/39/annual-report. [Accessed 8 March 2018].

[2] Ministry of Energy Kenya, "5000+ MW Power Generation Strategy," 18 August 2016. [Online]. Available: http://energy.go.ke/5000-mw-power-generation-strategy/. [Accessed 12 March 2018].

[3] GIZ, "Wind opportunities in Kenya report," 18 April 2016. [Online]. Available: http://www.giz.de.en/worldwide/36585.html. [Accessed 17 March 2018].

[4] African Union, "About Africa Union Agenda 2063," 17 July 2016. [Online]. Available: http://au.int/en/agenda2063/about. [Accessed 19 March 2018].

[5] Government of Kenya, "Sustainable energy," 13 May 2016. [Online]. Available: http://energy.go.ke/sustainable-energy/. [Accessed 23 March 2018].

[6] M. DJ, "Impacts of wind powered generation resource integration on prices in the ERCOT nodal market," *IEEE Power and Energy society,* vol. 2, no. 3, pp. 1-4, 2012.

[7] L. Wang, L. Gerber and A. Liang, "Wind power forecasting for reduction of system reserve," in *Wang, L., Gerber, A., Liang, J., et al.: 'Wind powerForty-Fifth Int. Universities Power Engineering Conf*, New Jersey, 2013.

[8] C. Hamon and L. Soder, "Review paper on wind power impact on operation of reserves," in *Hamon, C., Söder, L.: 'Review paper on wind power i Eighth Int. Conf. on the European Energy Market (EEM)*, Zagreb, 2011.

[9] R. Doherty and M. O'Malley, "Quantifying reserve demands due to increasing wind power penetration," in *IEE Power Tech* , Bologna, 2003.

[10] H. Holttien, "Impact of hourly wind power variations on the system operation in the Nordic countries," *Wind Engineering,* pp. 192-218, April 2009.

[11] P. Norgard and P. Holtinnen, "A multi-turbine power curve approach," in *Nordic Wind Power*, 2004.

[12] Energy regulatory commission, "Wind sector prospectors Kenya," November 2016. [Online]. Available: http://erc.go.ke/dowloads. [Accessed 27 March 2018].

[13] X. Liu and W. Xu, "Minimum emission dispatch constrained by stochastic wind power availability and cost," *IEEE Trans. Power Syst,* pp. 1705-1713, July 2015.

[14] R. Piwko, X. Bai and K. Clark, "The effects of integrating wind power on transmission system planning, reliability, and operations," The New York State Energy Research and Development Authority, New York, 2014.

[15] R. Doherty and M. O'Malley, "A new approach to quantify reserve demand in systems with significant installed wind capacity," *IEEE Trans. Power Syst,* pp. 587-595, October 2015.

[16] H. Holtinnen, "Using standard deviation as a measure of increased operational reserve requirement for wind power," *Wind Eng,* pp. 355-378, 2016.

[17] G. Strbac, A. Shakoor and M. Black, " Impact of wind generation on the operation and development of the UK electricity systems," *Electrical Power Syst,* pp. 1214-1227, 2007.

[18] G. Liu and K. Tomsovic, "Quantifying spinning reserve in systems with significant wind power penetration," *IEEE Trans. Power Syst,* pp. 2385-2393, 2015.

[19] M. Ortega and D. Kirschen, "Estimating the spinning reserve requirements in systems with significant wind power generation penetration," *IEEE Trans. Power Syst,* pp. 114-124, 2009.

[20] M. Matos and R. Bessa, "Setting the operating reserve using probabilistic wind power forecast," *IEEE Trans. Power Syst,* pp. 594-603, 2011.

[21] R. Billinton and R. Allan, Reliability evaluation of power systems, New York: Plenum Press, 1996.

[22] A. Jianxue, C. Zobaa, C. Huang and C. Chen, "Day-ahead allocation of operation reserve in composite power systems with large-scale centralized wind farms," *Mod. Power Syst Clean Energy,* pp. 238-247, 2016.

[23] R. Claudia and R. Torres, "Claudia Rahmann, R.A. Torres.Quantifying operating reserves with wind power: towards probabilistic dynamic approaches," *Claudia Rahmann, R.A. Torres.: 'Quantifying operating reserves with wind power: towards IET generation transmission & distribution,* pp. 948-956, September 2015.

[24] J. Chen, W. Wu, B. Zhung and B. Wang, "A spinning reserve allocation method for power generation dispatch accommodating large-scale wind power integration," *Energies,* pp. 5238-5245, 2013.

[25] P. Antony, S. Samuel and P. Richard, "Reserve requirements for wind power integration: A scenario-based stochastic programing framework," *IEEE Trans. on Power Syst.,* vol. 26, no. 4, 2011.

[26] M. Brandon, A. Jay, M. Pedro and J. Paulina, "Spinning reserve Determination and power Generation Dispatch Optimization for Wind Power Integration Systems," *Energies,* pp. 5238-5245, 2012.

[27] E. Ela and B. Lannoye, "Evolution of operating reserve determination in wind power integration studies," in *IEEE Power and Energy Society*, 2014.

[28] J. Wang, M. Shahidehpour and Z. Li, "] Wang J, Shahidehpour M and Security-constrained unit commitment with volatile wind power generation," *IEEE Trans Power Syst,* pp. 1319-1327, 2008.

[29] F. Bouffard and F. Galiana, "Stochastic security for operations planning with significant wind power generation," *IEEE Trans. Power Syst,* pp. 306-316, 2008.

[30] H. Bludszuweit, J. Dominguez and A. Llombart, "Statistical analysis of wind power forecast error," *IEEE Trans. Power Syst,* pp. 983-991, 2008.

[31] M. Lange, "On the uncertainty of wind power predictions—analysis of the forecast accuracy and statistical distribution of errors," *J. Sol. Energy Eng.,* pp. 177-184, 2005.

[32] M. Matos and R. Bessa, "Operating reserve adequacy evaluation using uncertainties of wind power forecast," *IEEE Bucharest Power Tech,* Novemeber 2009.

[33] R. Bessa and M. Matos, "Comparison of probabilistic and deterministic approaches for setting operating reserve in systems with high penetration of wind power," in *Seventh Mediterranean Conf. and Exhibition on Power Generation, Transmission, Distribution*, Barcelona, 2010.

[34] G. Giebel, R. Brownsword and G. Kariniotakis, "The state of the art in short-term prediction of wind power," Giebel, G., Brownsword, R., Kariniotakis, G., et al.: 'The state of the art in short-term prediction of wind power – ANEMOS.plus & SafeWind, 2015.

[35] C. Chen, S. Duan, T. Cai, B. Liu and G. Hu, "Smart energy management system for optimal microgrid economic operation," *IET Renew. Power Generation,* pp. 258-267, 2011.

[36] C. Maurer, S. Krahl and H. Weber, "Dimensioning of secondary and tertiary control reserve by probabilistic methods," *Euro Trans. Electr Power,* pp. 544-552, 2009.

[37] T. Hammons, "Integrating renewable energy sources into Europeangrids," *Electr Power Energy Syst,* pp. 462-475, 2008.

[38] A. Tuchy, P. Meibon, E. Denny and M. O'Malley, "Unit commitment for systems with significant wind penetration," *IEEE Trans. Power Syst,* vol. 24, no. 2, pp. 592-601, 2009.

[39] L. Anstine, R. Burke and J. Casey, "Application of probability methods to the determination of spinning reserve requirements for the Pennsylvania–New Jersey–Maryland interconnection," *IEEE Trans. Power Appar,* vol. 82, no. 68, pp. 726-735, 1999.

[40] Deutsche Energie-Agentur GmbH, "Deutsche EDena grid study II. Integration of renewable energy sources in the German power supply system from 2015–2020 with an outlook to 2025," Dena, 2010.

[41] F. Lov, D. Hansen, A. Cutululis and P. S'orensen, " A Survey of Interconnection Requirements for Wind Power," in *F. Iov, A. D. Hansen, N. A. Cutululis, and P. S¨orensen. A Survey of Interconnection Requirements fIn Proc. Nordic Wind Power Conference*, Denmark, 2007.

[42] R. Belmans, " Balancing wind energy in the grid; an overall, techno-economic and coordinated approach," Belgian Science Policy Office, Brussels, 2012.

[43] M. Shu, G. Zhou, Y. Li and M. Liu, "Spinning reserve Determination and power Generation Dispatch Optimization for Wind Power Integration Systems," *Energies ,* pp. 5238-5245, 2012.

[44] F. Iov, A. Hansen, N. Cutululis and P. Sorensen, " A Survey of Interconnection Requirements for Wind Power," in *In Proc. Nordic Wind Power Conference*, Roskilde, 2007.

[45] M. Xu and X. Zhuan, "Optimal Planning for Wind Power Capacity in an Electric Power System," *Renewable Energy,* no. 53, pp. 280-286, 2012.

[46] M. Milligan, "Operating Reserves and Wind Power Integration; an International Comparison', in As Well As On Transmission Networks for Offshore Wind Power," in *9th International Workshop on Large-Scale Integration of Wind Power into Power Systems*, Quebec, 2010.